SUZUKI

RMX250S

SERVICE MANUAL

99500-22071-01E

FOREWORD

This manual contains an introductory description on the SUZUKI RMX250S and procedures for its inspection/service and overhaul of its main components.
Other information considered as generally known is not included.
Read the GENERAL INFORMATION section to familiarize yourself with the motorcycle and its maintenance. Use this section as well as other sections as a guide for proper inspection and service.
This manual will help you know the motorcycle better so that you can assure your customers of fast and reliable service.

- *This manual has been prepared on the basis of the latest specifications at the time of publication. If modifications have been made since then, differences may exist between the content of this manual and the actual motorcycle.*
- *Illustrations in this manual are used to show the basic principles of operation and work procedures. They may not represent the actual motorcycle exactly in detail.*
- *This manual is written for persons who have enough knowledge, skills and tools, including special tools, for servicing SUZUKI motorcycles. If you do not have the proper knowledge and tools, ask your authorized SUZUKI motorcycle dealer to help you.*

⚠ WARNING

Inexperienced mechanics or mechanics without the proper tools and equipment may not be able to properly perform the services described in this manual. Improper repair may result in injury to the mechanic and may render the motorcycle unsafe for the rider and passenger.

SUZUKI MOTOR CORPORATION
Motorcycle Service Department
© COPYRIGHT SUZUKI MOTOR CORPORATION 1998

GROUP INDEX

GENERAL INFORMATION	1
PERIODIC MAINTENANCE	2
ENGINE	3
FUEL AND LUBRICATION SYSTEM	4
COOLING SYSTEM	5
CHASSIS	6
ELECTRICAL SYSTEM	7
SERVICING INFORMATION	8
RMX250SX ('99-MODEL)	9

HOW TO USE THIS MANUAL

TO LOCATE WHAT YOU ARE LOOKING FOR:

1. The text of this manual is divided into sections.
2. The section titles are listed in the GROUP INDEX.
3. Holding the manual as shown at the right will allow you to find the first page of the section easily.
4. The contents are listed on the first page of each section to help you find the item and page you need.

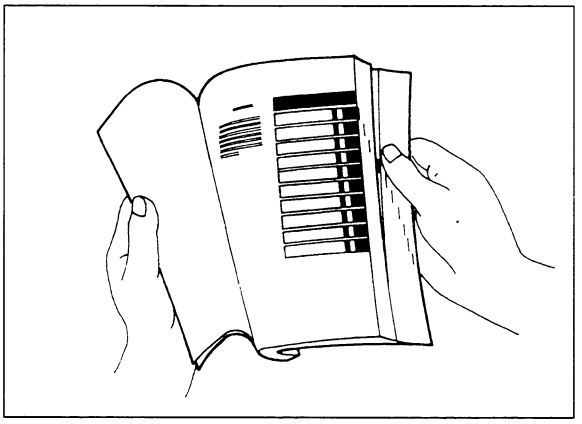

COMPONENT PARTS AND WORK TO BE DONE

Under the name of each system or unit, is its exploded view. Work instructions and other service information such as the tightening torque, lubricating points and locking agent points, are provided.

Example: Front wheel

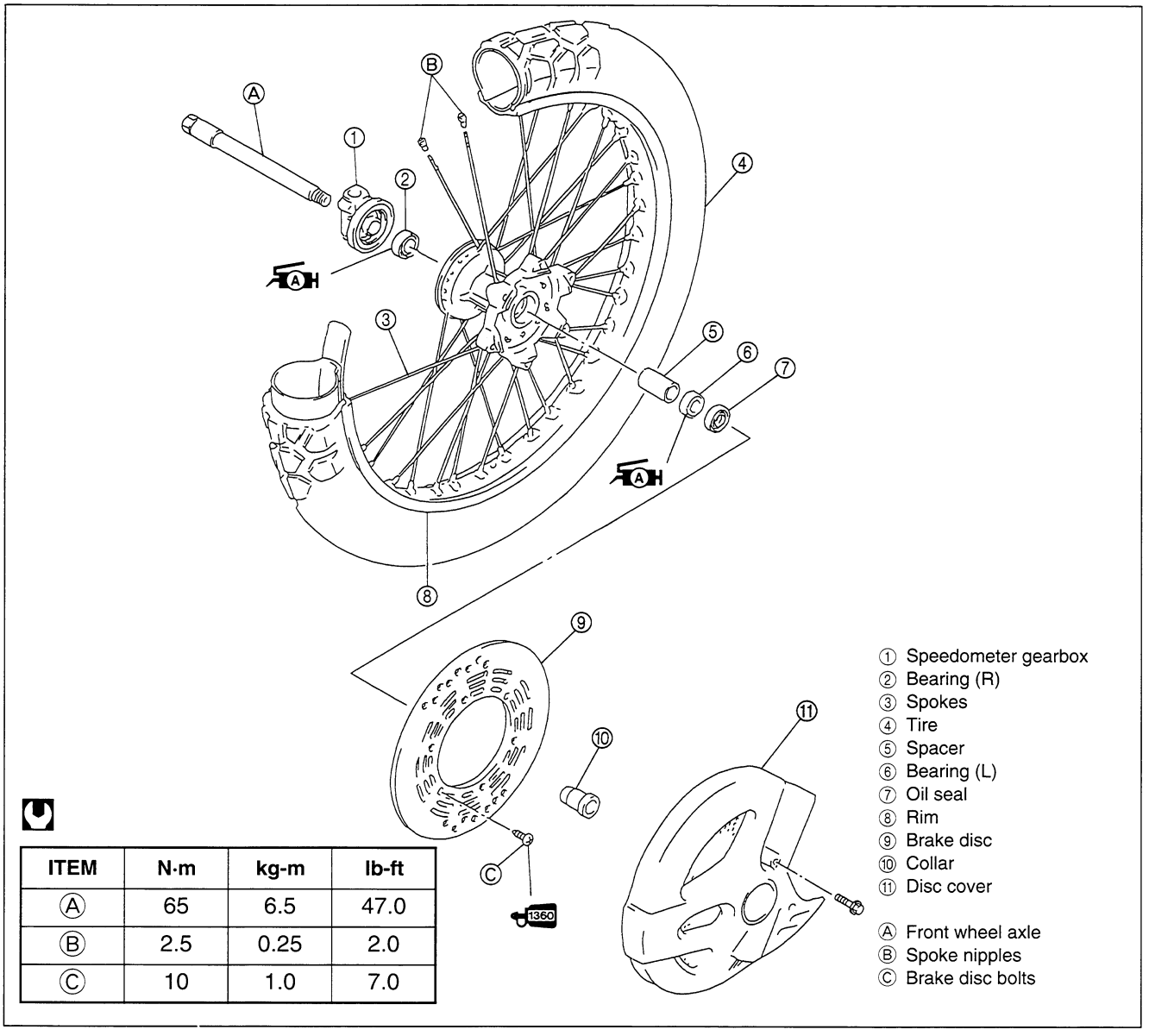

ITEM	N·m	kg-m	lb-ft
Ⓐ	65	6.5	47.0
Ⓑ	2.5	0.25	2.0
Ⓒ	10	1.0	7.0

SYMBOL

Listed in the table below are the symbols indicating instructions and other information necessary for servicing. The meaning of each symbol is also included in the table.

SYMBOL	DEFINITION	SYMBOL	DEFINITION
	Torque control required. Data beside it indicates specified torque.	1303	Apply THREAD LOCK SUPER “1303”. 99000-32030
OIL	Apply oil. Use transmission oil unless otherwise specified.	1360	Apply THREAD LOCK SUPER “1360”. 99000-32130
A	Apply SUZUKI SUPER GREASE “A”. 99000-25010	BF	Apply or use brake fluid.
M	Apply SUZUKI MOLY PASTE. 99000-25140	V	Measure in voltage range.
S	Apply SUZUKI SILICONE GREASE. 99000-25100	Ω	Measure in resistance range.
1215	Apply SUZUKI BOND “1215” 99000-31110	TOOL	Use special tool.
1207B	Apply SUZUKI BOND “1207B”. 99000-31140	LLC	Use engine coolant. 99000-99032-10X
1322	Apply THREAD LOCK SUPER “1322”. 99000-32110	FORK	Use fork oil. 99000-99001-SS05

GENERAL INFORMATION

CONTENTS

WARNING/CAUTION/NOTE 1- 1
GENERAL PRECAUTIONS 1- 1
SUZUKI RMX250SW ('98-MODEL) 1- 3
SERIAL NUMBER LOCATION 1- 3
FUEL, OIL AND ENGINE COOLANT RECOMMENDATIONS 1- 3
FUEL 1- 3
ENGINE OIL 1- 3
TRANSMISSION OIL 1- 4
BRAKE FLUID 1- 4
FRONT FORK OIL 1- 4
REAR SHOCK ABSORBER OIL 1- 4
ANTI-FREEZE 1- 4
ENGINE COOLANT 1- 4
BREAK-IN PROCEDURES 1- 4
INFORMATION LABELS 1- 5
SPECIFICATIONS 1- 6
COUNTRY OR AREA 1- 7

WARNING/CAUTION/NOTE

Please read this manual and follow its instructions carefully. To emphasize special information, the symbol and the words WARNING, CAUTION and NOTE have special meanings. Pay special attention to the messages highlighted by these signal words.

⚠ WARNING

Indicates a potential hazard that could result in death or injury.

⚠ CAUTION

Indicates a potential hazard that could result in motorcycle damage.

NOTE:
Indicates special information to make maintenance easier or instructions clearer.

Please note, however, that the warnings and cautions contained in this manual cannot possibly cover all potential hazards relating to the servicing, or lack of servicing, of the motorcycle. In addition to the WARNINGS and CAUTIONS stated, you must use good judgement and basic mechanical safety principles. If you are unsure about how to perform a particular service operation, ask a more experienced mechanic for advice.

GENERAL PRECAUTIONS

⚠ WARNING

- **Proper service and repair procedures are important for the safety of the service mechanic and the safety and reliability of the motorcycle.**
- **When two or more persons work together, pay attention to the safety of each other.**
- **When it is necessary to run the engine indoors, make sure that exhaust gas is forced outdoors.**
- **When working with toxic or flammable materials, make sure that the area you work in is well ventilated and that you follow all of the manufacturer's instructions.**
- **Never use gasoline as a cleaning solvent.**
- **To avoid getting burned, do not touch the engine, engine oil, radiator and exhaust system until they have cooled.**
- **After servicing the fuel, oil, engine coolant, exhaust or brake systems, check all of the lines and fittings related to the system for leaks.**

⚠ CAUTION

* If parts replacement is necessary, replace the parts with Suzuki Genuine Parts or their equivalent.
* When removing parts that are to be reused, keep them arranged in an orderly manner so that they may be reinstalled in the proper order.
* Be sure to use special tools when instructed.
* Make sure that all parts used in reassembly are clean. Lubricate them when specified.
* Use the specified lubricant, bond, or sealant.
* When removing the battery, disconnect the negative cable first and then the positive cable.
* When reconnecting the battery, connect the positive cable first and then the negative cable, and cover the positive terminal with the terminal cover.
* When performing service to electrical parts, disconnect the battery negative cable unless the service procedure requires the battery power.
* When tightening cylinder head and crankcase bolts and nuts, tighten the larger sizes first. Always tighten the bolts and nuts from the inside working out, diagonally and to the specified tightening torque.
* Whenever you remove oil seals, gaskets, packing, O-rings, self-locking nuts, locking washers, cotter pins, circlips, and certain other parts as specified, be sure to replace them with new ones. Also, before installing these new parts, be sure to remove any left over material from the mating surfaces.
* Never reuse a circlip. When installing a new circlip, take care not to expand the end gap larger than required to slip the circlip over the shaft. After installing a circlip, always ensure that it is completely seated in its groove and securely fitted.
* Use a torque wrench to tighten fasteners to the specified torque. Wipe off grease and oil if a thread is smeared with them.
* After reassembling, check parts for tightness and proper operation.

* To protect the environment, do not unlawfully dispose of used motor oil, engine coolant, all other fluids, batteries, and tires.
* To protect the earth's natural resources, properly dispose of used motorcycles and parts.

SUZUKI RMX250SW ('98-MODEL)

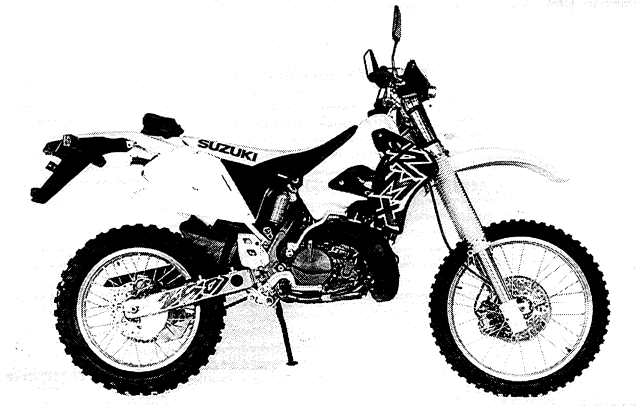

RIGHT SIDE

LEFT SIDE

* Difference between photographs and the actual motorcycles depends on the markets.

SERIAL NUMBER LOCATION

The frame serial number or V.I.N. (Vehicle Identification Number) ① is stamped on the steering head pipe. The engine serial number ② is stamped on the crankcase assembly. These numbers are required especially for registering the machine and ordering spare parts.

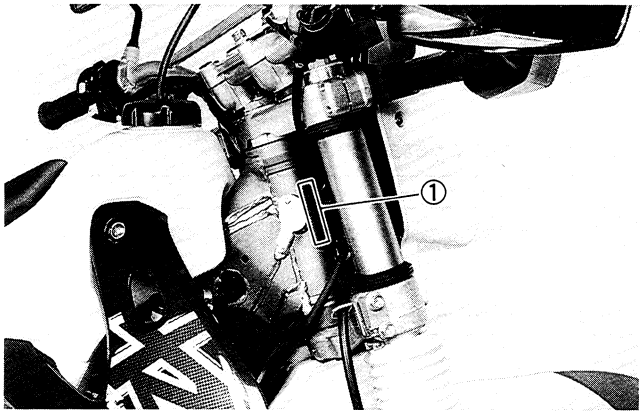

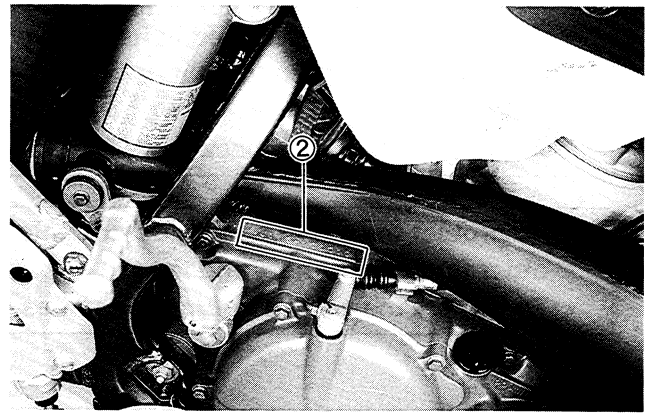

FUEL, OIL AND ENGINE COOLANT RECOMMENDATIONS

Be sure to use the specified fuel, oils, and engine coolant. Fuel, oil, and engine coolant specifications are listed below.

FUEL

Use only unleaded gasoline with a minimum grade of 95 octane (RON).

ENGINE OIL

B.P. RACING 2T-R, SHELL SPORTS SX, MOTUL 800 2T, CASTROL A747 or equivalent Two Cycle Racing Lubricant

⚠ CAUTION

* **A mixture containing too little oil will cause piston seizure. Too much oil will cause excessive carbon build-up resulting in preignition, a fouled spark plug and loss of engine power.**
* **Make sure the fuel and engine oil mixture ratio is 32:1.**

TRANSMISSION OIL

Use a good quality SAE 10W/40 multi-grade motor oil.

BRAKE FLUID

Use DOT 4 brake fluid.

⚠ WARNING

This motorcycle uses a glycol-based brake fluid. Do not use or mix different types of brake fluid such as silicone-based and petroleum-based fluids for refilling the system, otherwise serious damage will result to the brake system.
Never use any brake fluid taken from old, used or unsealed containers.
Never re-use brake fluid left over from the last servicing or which has been stored for a long period of time.

FRONT FORK OIL

Use fork oil SS-05 or an equivalent fork oil.

REAR SHOCK ABSORBER OIL

Use rear suspension oil SS-25 or an equivalent rear suspension oil.

ANTI-FREEZE

Use anti-freeze which is designed for use in aluminum radiators. Anti-freeze performs as a corrosion and rust inhibitor, a water pump lubricant, as well as an anti-freezing solution. Therefore, always use anti-freeze in the engine coolant, regardless of if the atmospheric temperature in your area does not go below the freezing point.

The percentage of anti-freeze in the engine coolant, should be between 50–60%. If the percentage of anti-freeze is below 50%, the engine coolant's anti-freezing and rust inhibiting capabilities will be reduced. Always keep the anti-freeze content above 50%, even though the atmospheric temperature might not go below the freezing point.

ENGINE COOLANT

Mix only distilled water with the anti-freeze, since other types of water can corrode and clog the aluminum radiator.
For detailed information on the engine coolant mixture, refer to the cooling system section on page 5-2.

Engine coolant quantity (total): 1170 ml (1.3 US qt/1.1 Imp qt)

BREAK-IN PROCEDURES

During manufacturing only the best possible materials are used and all machined parts are finished to a very high standard. It is still necessary to allow the moving parts to "break-in" before subjecting the engine to maximum stresses. The future performance and reliability of the engine depends on the care and restraint exercised during its early life. Refer to the following break-in throttle position recommendations.

Initial 800 km: Below $^1/_2$ throttle
Up to 1 600 km: Below $^3/_4$ throttle

- Upon reaching an odometer reading of 1600 km, you can subject the motorcycle to full throttle operation, for short periods of time.

INFORMATION LABELS

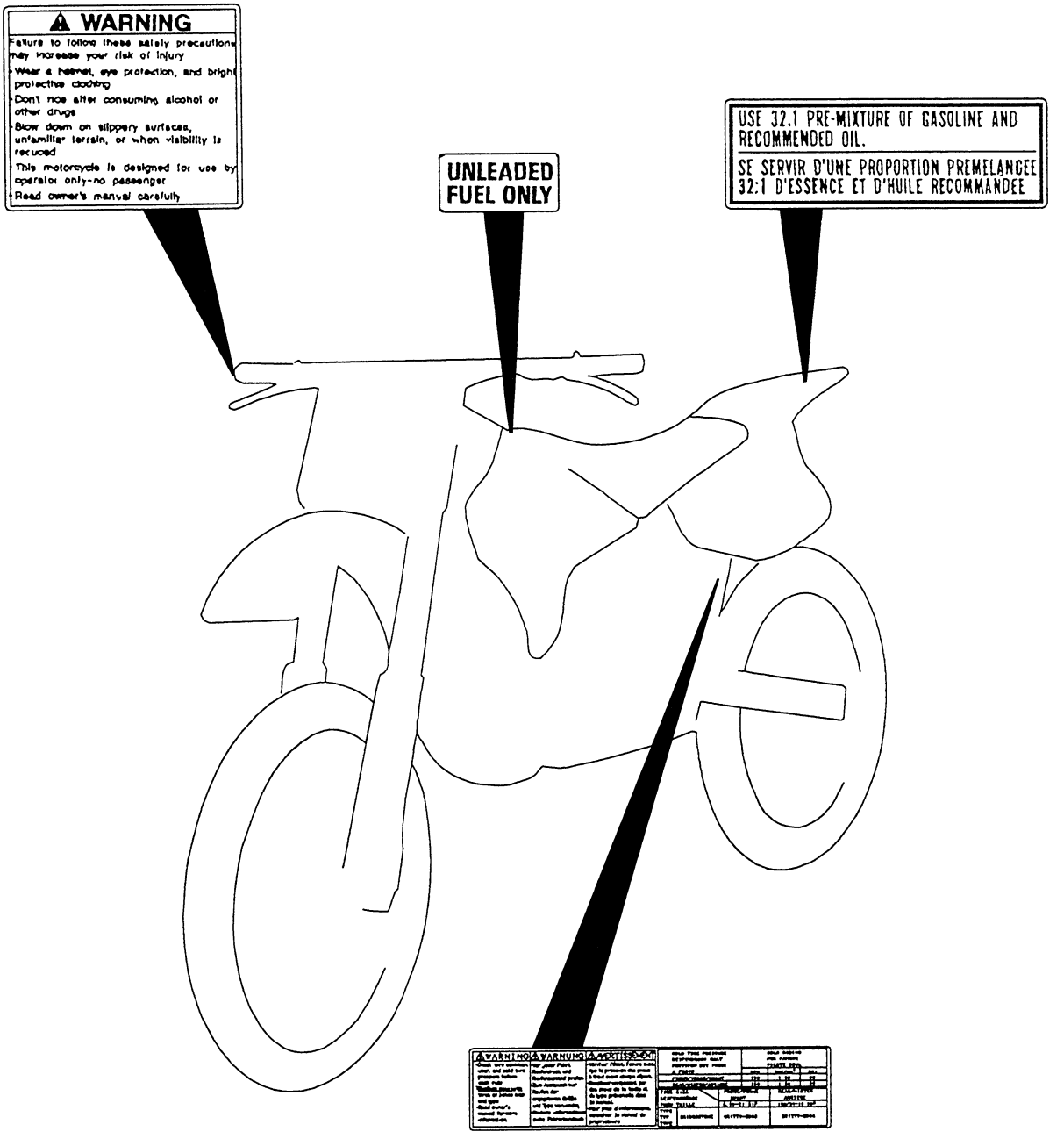

SPECIFICATIONS

DIMENSIONS AND DRY MASS

Overall length	2 260 mm (89.0 in)
Overall width	880 mm (34.6 in)
Overall height	1 275 mm (50.2 in)
Wheelbase	1 480 mm (58.3 in)
Ground clearance	325 mm (12.8 in)
Seat height	945 mm (37.2 in)
Dry mass	113 kg (249 lbs)

ENGINE

Type	Two-stroke, liquid-cooled
Intake system	Crankcase reed valve
Number of cylinders	1
Bore	67.0 mm (2.637 in)
Stroke	70.8 mm (2.787 in)
Displacement	249 cm^3 (15.2 cu. in)
Compression ratio	8.3 : 1/10.3 : 1
Carburetor	KEIHIN PJ38, single
Air cleaner	Polyurethane foam element
Starter system	Primary kick
Lubrication system	Fuel/oil premixture of 32 : 1

TRANSMISSION

Clutch	Wet, multi-plate type
Transmission	5-speed constant mesh
Gearshift pattern	1-down, 4-up
Primary reduction ratio	2.652 (61/23)
Gear ratios, 1st (low)	2.285 (32/14)
2nd	1.733 (26/15)
3rd	1.375 (22/16)
4th	1.090 (24/22)
5th (top)	0.863 (19/22)
Final reduction ratio	3.846 (50/13)
Drive chain	RK520SMOZ9, 114 links

CHASSIS

Front suspension	Telescopic, coil spring, oil damped, spring preload fully adjustable, compression damping force 18-way adjustable, rebound damping force 14-way adjustable
Rear suspension	Link type, gas/coil spring, oil damped, spring preload fully adjustable, compression damping force 21-way adjustable rebound damping force 26-way adjustable
Caster	28°
Trail	111 mm (4.4 in)
Steering angle	45° (right & left)
Turning radius	2.3 m (7.5 ft)
Front brake	Disc
Rear brake	Disc
Front tire size	3.00-21 51P, tube
Rear tire size	120/90-18 65P, tube

ELECTRICAL

Ignition type	Electronic ignition (CDI)
Ignition timing	4° B.T.D.C. at 1500 r/min
Spark plug	NGK BP9EV
Generator	Flywheel magneto
Headlight	12V 60/55W
Turn signal light	12V 21W
Brake light/taillight	12V 21/5W
Speedometer light	12V 1.7W
Neutral indicator light	12V 2W
High beam indicator light	12V 2W
True signal indicator light	12V 2W

CAPACITIES

Fuel tank including reserve	11.5 L (3.0/2.5 US/Imp.gal)
Reserve	2.5 L (0.7/0.5 US/Imp.gal)
Transmission oil	650 ml (0.7/0.6 US/Imp.qt)
Engine coolant	1.2 L (1.3/1.1 US/Imp.qt)

∗ These specifications are subject to change without notice.

COUNTRY OR AREA

The code on the left, stand for the country or area on the right.

CODE	COUNTRY OR AREA
E-24	Australia

PERIODIC MAINTENANCE

2

CONTENTS

PERIODIC MAINTENANCE SCHEDULE 2- 1
PERIODIC MAINTENANCE CHART 2- 1
LUBRICATION POINTS 2- 2
MAINTENANCE AND TUNE-UP PROCEDURE 2- 3
CYLINDERHEAD, CYLINDER AND EXHAUST VALVE 2- 3
SPARK PLUG 2- 3
AIR CLEANER 2- 4
CARBURETOR 2- 6
FUEL HOSE 2- 6
CLUTCH 2- 7
TRANSMISSION OIL 2- 7
COOLING SYSTEM 2- 8
DRIVE CHAIN 2- 9
BRAKES 2-11
TIRES AND WHEELS 2-14
STEERING 2-15
FRONT FORK 2-15
REAR SUSPENSION 2-15
EXHAUST PIPE BOLTS AND MUFFLER BOLTS 2-16
CHASSIS NUTS AND BOLTS 2-17

PERIODIC MAINTENANCE SCHEDULE

The chart below lists the recommended intervals for all the required periodic service work necessary to keep the motorcycle operating at peak performance and economy. Maintenance intervals are expressed in terms of kilometers, miles and months, and are dependent on whichever comes first.

NOTES:
More frequent servicing may be performed on motorcycles that are used under severe conditions.

PERIODIC MAINTENANCE CHART

Interval / Item	km	1000	5000	10000	15000
	miles	600	3000	6000	9500
	month(s)	1	5	10	15
Cylinder head, cylinder and exhaust valve		C	C	C	C
Spark plug		C	R	R	R
Air cleaner element		Clean every 3000 km (2000 miles).			
Idle speed		I	I	I	I
Throttle cable play		I	I	I	I
Fuel hose		I	I	I	I
		Replace every four years.			
Clutch		I	I	I	I
Transmission oil		R	–	R	–
Radiator hoses		–	I	I	I
		Replace every four years.			
Engine coolant		Replace every two years.			
Drive chain		I	I	I	I
		Clean and lubricate every 1000 km (600 miles).			
Brakes		I	I	I	I
Brake hoses		I	I	I	I
		Replace every four years.			
Brake fluid		I	I	I	I
		Replace every two years.			
Steering		I	I	I	I
Front fork		I	I	I	I
Rear suspension		I	I	I	I
Tires and wheels		I	I	I	I
Exhaust pipe bolts and muffler bolts		T	T	T	T
Chassis nuts and bolts		T	T	T	T

NOTE: I = Inspect and clean, adjust, replace or lubricate as necessary.
R = Replace T = Tighten C = Clean

LUBRICATION POINTS

Proper lubrication is important for smooth operation and long life of each working part of the motorcycle. Major lubrication points are indicated below.

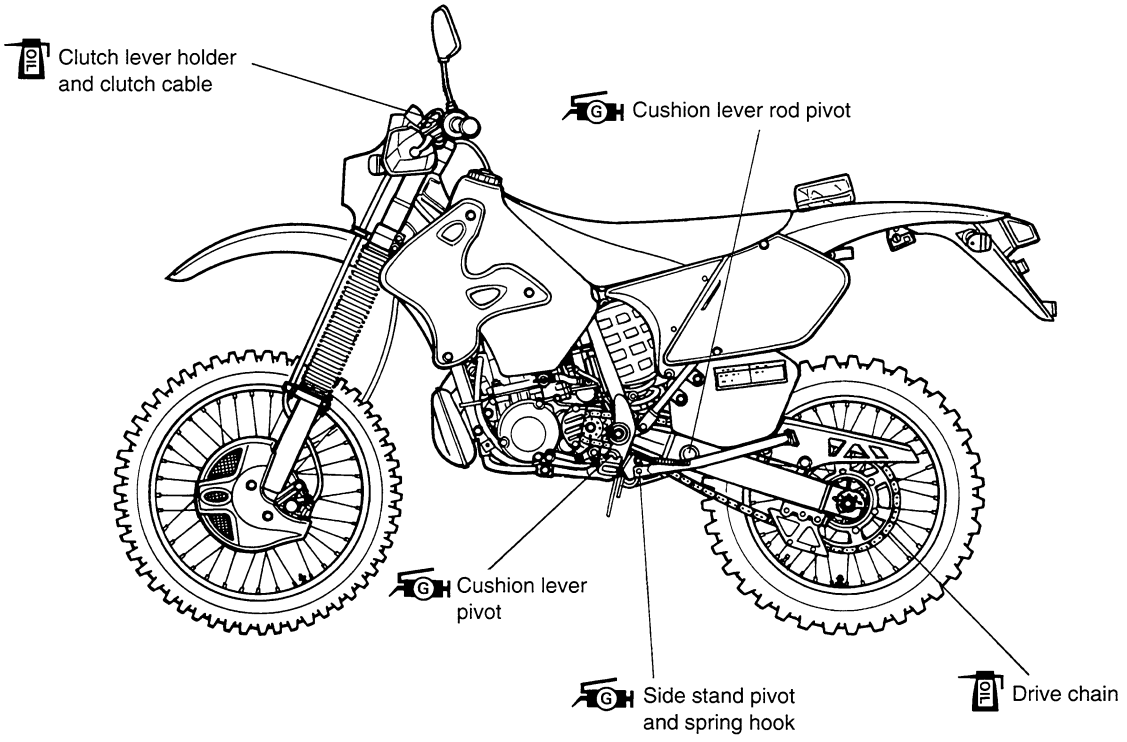

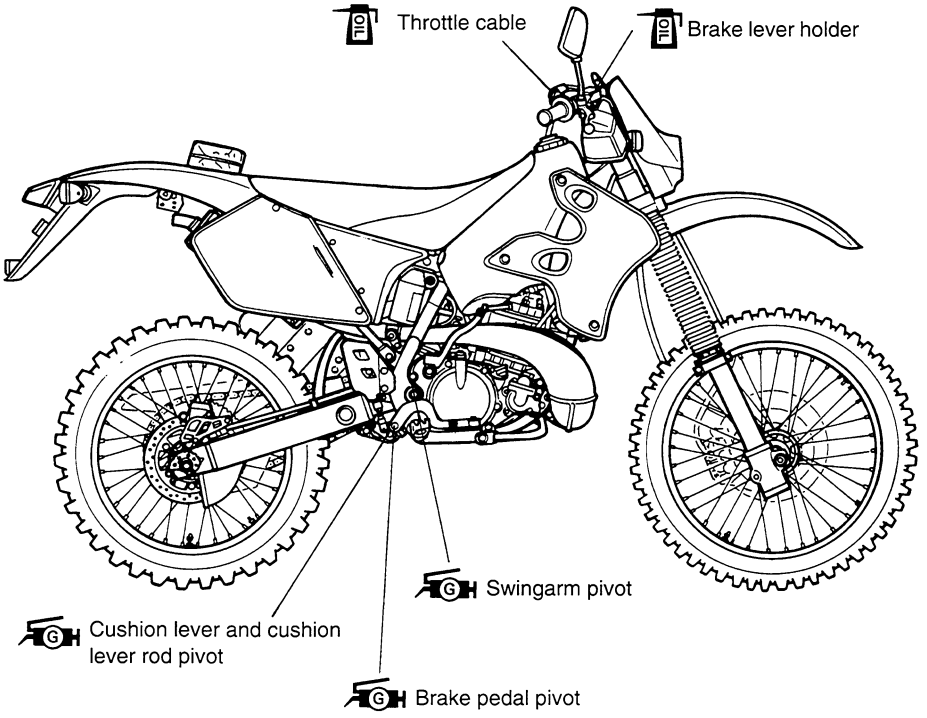

NOTE:

* *Before lubricating each part, clean off any rusty spots and wipe off any grease, oil, dirt or grime.*
* *Lubricate exposed parts which are subject to rust, with a rust preventative spray, especially whenever the motorcycle has been operated under wet or rainy conditions.*

MAINTENANCE AND TUNE-UP PROCEDURE

This section describes the servicing procedures for each item mentioned in the Periodic Maintenance chart.

CYLINDERHEAD, CYLINDER AND EXHAUST VALVE

Remove carbon initially at 1000 km (600 miles, 1 month) and every 5000 km (3000 miles, 5 months) thereafter.

(See p. 3-18.)

SPARK PLUG

Clean initially at 1000 km (600 miles, 1 month) and replace every 5000 km (3000 miles, 5 months) thereafter.

- Remove the spark plug.

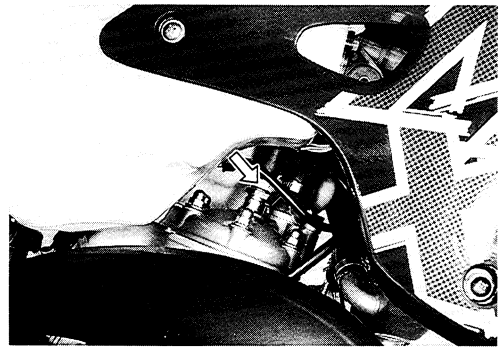

⚠ CAUTION

Dirt can damage the engine if it enters an open spark plug hole. Cover the spark plug hole whenever the spark plug is removed.

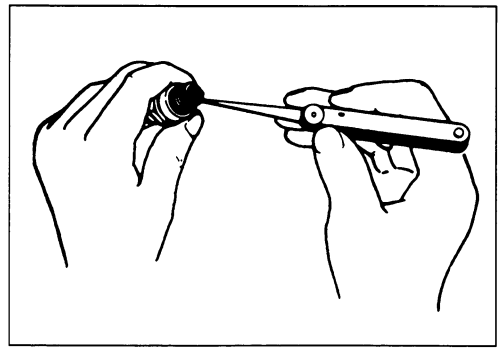

CARBON DEPOSIT

Check for carbon deposits on the spark plug. To remove any carbon deposits use a spark plug cleaner machine or carefully use a tool with a pointed end.

SPARK PLUG GAP

Use a thickness gauge to measure the spark plug gap. If out of specification, adjust the gap.

Spark plug gap (Standard): 0.5–0.6 mm (0.020–0.024 in)

TOOL 09900-20803: Thickness gauge

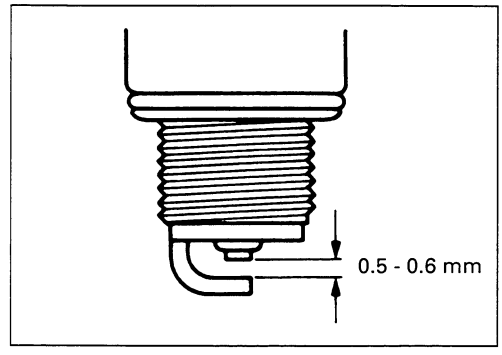

ELECTRODE CONDITION

Inspect the electrodes. If they are extremely worn or burnt, replace the spark plug. If any part of the spark plug is damaged, replace the spark plug.

HEAT RANGE

Check to see the heat range of the spark plug.

⚠ CAUTION

An improper spark plug may have an incorrect fit or heat range for your engine. This may cause severe engine damage which will not be covered under warranty. Use the spark plug listed below or equivalent.

Standard spark plug: NGK BR9EV

- Tighten the spark plug to the specified torque.

Spark plug: 27 N·m (2.7 kg-m, 19.5 lb-ft)

AIR CLEANER

Clean every 3000 km (2000 miles).

- Remove the seat. (See p. 6-2.)
- Remove the air cleaner case cover ①.
- Loosen the wing nut ② and remove the air cleaner element assembly.
- Separate the polyurethane foam element from the frame.

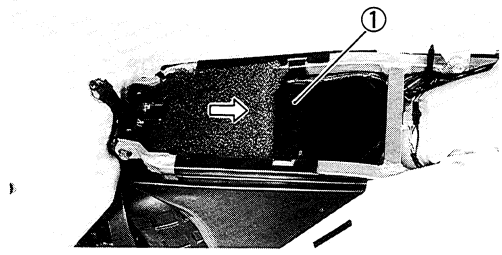

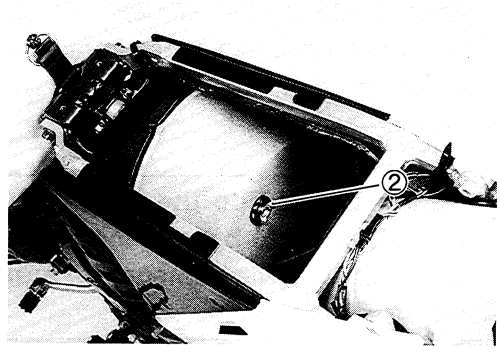

- Use a non-flammable solvent ③ to clean the air cleaner element.
- Gently squeeze the air cleaner element to remove the excess solvent.
- Immerse the air cleaner element in motor oil ④ and squeeze out the excess oil. The air cleaner element should be wet but not dripping.

NOTE:
Do not twist or wring the air cleaner element because it will tear or the individual cells of the air cleaner element will be damaged.

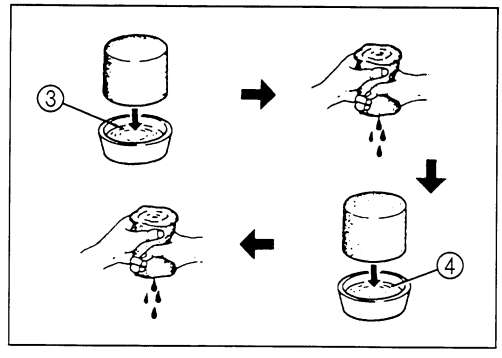

⚠ WARNING

Operating the engine without the air cleaner element properly in place could allow flames to spit back from the engine to the air cleaner element, or allow dirt to enter the engine. This may could result in a fire or cause severe engine damage.

⚠ CAUTION

Clean or replace the air cleaner element frequently if the motorcycle is used in dusty, wet or muddy conditions. The air cleaner element will clog under these conditions, and this may cause engine damage, poor performance, and poor fuel economy. Clean the air cleaner case and element immediately if water gets in the air cleaner box.

⚠ CAUTION

A torn air cleaner element will allow dirt to enter the engine and can damage the engine. Carefully examine the air cleaner element for tears during cleaning. Replace it with a new one if it is torn.

NOTE:
When reinstalling the air cleaner element assembly and seat, be sure to do the following.

- Fit the projection of the frame in the holes of the air cleaner element.
- Install the air cleaner element assembly in the air cleaner box so the triangle projection of the air cleaner element faces the triangle projection of the box.

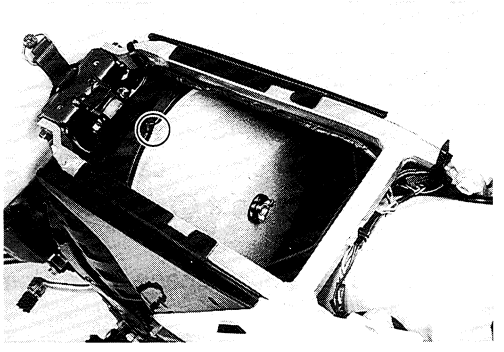

- After reinstalling the air cleaner case cover, insert the large mesh element between the frame and air cleaner case.
- Install the seat.

⚠ CAUTION

Failure to position the air cleaner element properly can allow dirt to bypass the air cleaner element. This will cause engine damage. Be sure to properly install the air cleaner element.

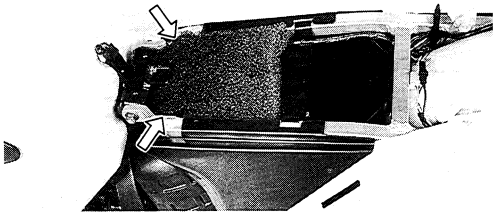

CARBURETOR

Inspect initially at 1000 km (600 miles, 1 month) and every 5000 km (3000 miles, 5 months) thereafter.

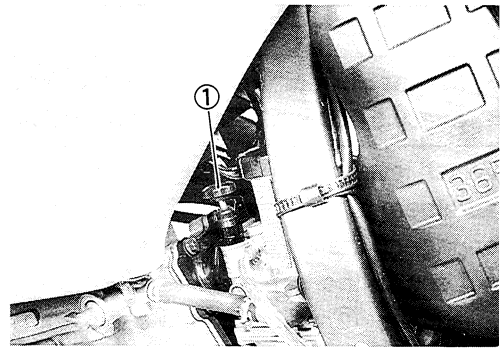

ENGINE IDLE SPEED

- Connect the tachometer to the plug cord.
- Start the engine and use the throttle stop screw ① to set the engine speed between 1150 and 1250 r/min.

Engine idle speed: 1200 ± 50 r/min

TOOL 09900-26006: Tachometer

NOTE:
Make this adjustment when the engine is hot.

THROTTLE CABLE PLAY

Throttle cable play Ⓐ should be 3–6 mm (0.12–0.24 in) as measured at the throttle grip when turning the throttle grip lightly. If the throttle cable play Ⓐ is incorrect, adjust it as follows.

- Loosen the lock nut ① and turn the adjuster ② in or out until the specified play is obtained.
- Tighten the lock nut ① while holding the adjuster ②.

Throttle cable play Ⓐ: 3–6 mm (0.12–0.24 in)

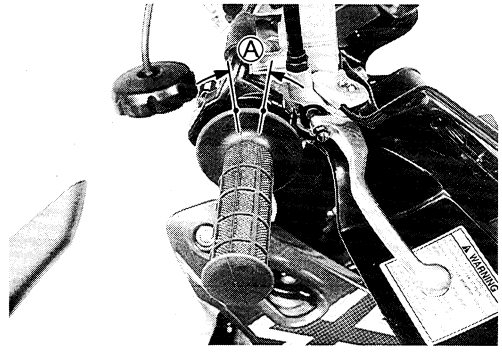

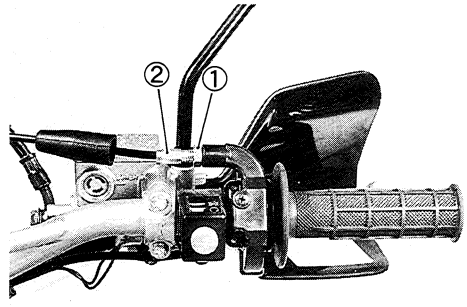

FUEL HOSE

Inspect initially at 1000 km (600 miles, 1 month) and every 5000 km (3000 miles, 5 months) thereafter. Replace every four years.

CLUTCH LEVER PLAY

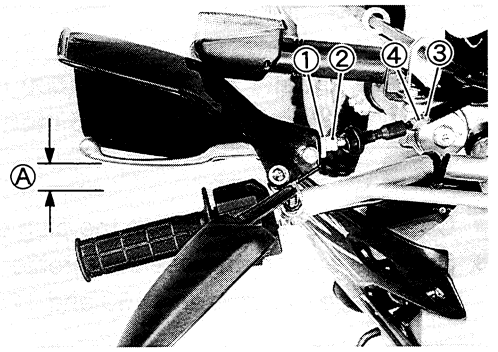

Inspect initially at 1000 km (600 miles, 1 month) and every 5000 km (3000 miles) thereafter.

Clutch lever play Ⓐ should be 10–15 mm (0.4–0.6 in) as measurement at the clutch lever end when the clutch begins to disengage. If the clutch lever play is incorrect, adjust it as follows.

- Loosen the cable adjuster lock nut ① and turn the cable adjuster ② or loosen the cable adjuster lock nut ③, and turn the cable adjuster ④ in or out to require the specified play.
- Tighten the cable adjuster lock nut while holding the cable adjuster in position.

Clutch lever play Ⓐ: 10–15 mm (0.4–0.6 in)

NOTE:
The clutch cable should be lubricated with a light weight oil whenever it is adjusted.

TRANSMISSION OIL

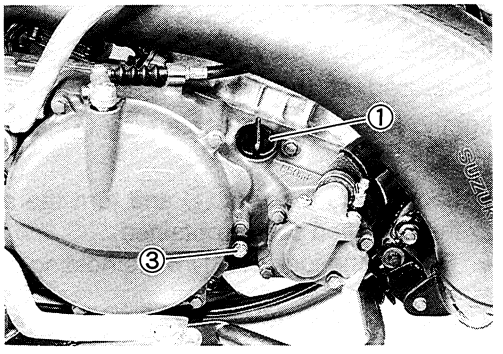

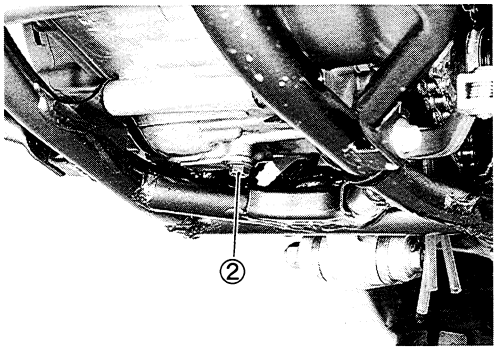

Replace initially at 1000 km (600 miles, 1 month) and every 10000 km (6000 miles, 10 months) thereafter.

After a long period of use, the transmission oil will deteriorate and quicken the wear of sliding and interlocking surfaces. Replace the transmission oil periodically following the procedure below.

- Keep the motorcycle upright, supported by a jack or wooden block.
- Start the engine to warm up the oil; this will facilitate the draining of the oil. Shut off the engine.
- Place the oil pan below the engine and drain the oil by removing the filler cap ① and drain plug ②.

⚠ WARNING

Engine oil and exhaust pipes can be hot enough to burn you. Wait until the oil drain plug and exhaust pipes are cool enough to touch with bare hands before draining oil.

- After draining the oil completely, fit the drain plug ② securely.

Drain plug: 13 N·m (1.3 kg-m, 9.5 lb-ft)

- Remove the oil level screw ③.
- Hold the motorcycle upright and add a good quality SAE 10W/40 multi-grade motor oil until the transmission oil comes out from the oil level hole.

⚠ CAUTION

Engine damage may occur if you use oil that does not meet Suzuki's specifications. Use the oil specified in the FUEL, OIL AND ENGINE COOLANT RECOMMENDATION section.

TRANSMISSION OIL CAPACITY

Oil change: 650 ml (0.7/0.6 US/Imp pt)

Overhaul: 750 ml (0.8/0.7 US/Imp pt)

- Install the filler cap and oil level screw.

COOLING SYSTEM

Inspect every 5000 km (3000 miles, 5 months).
Replace engine coolant every two years.
Replace radiator hoses every four years.

ENGINE COOLANT LEVEL CHECK

NOTE:
This motorcycle does not have an overflow tank at the end of the breather hose. Therefore, the engine coolant level may decrease while riding. Check the engine coolant level before every ride.

- Remove the radiator cap ① and check that the engine coolant level is at the bottom of the inlet hole.
- If not, replenish the radiator with the specified coolant.

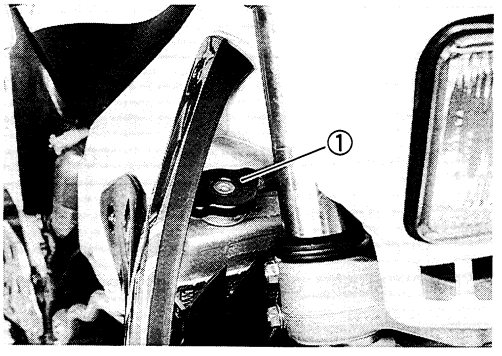

⚠ WARNING

Do not open the radiator cap when the engine is hot, as you may be injured by escaping hot liquid or vapor.

ENGINE COOLANT CHANGE

- Remove the radiator cap ① and drain plug ②. Then drain the engine coolant.
- Tighten the drain plug ②.

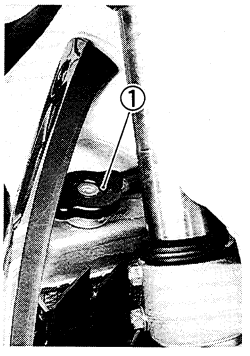

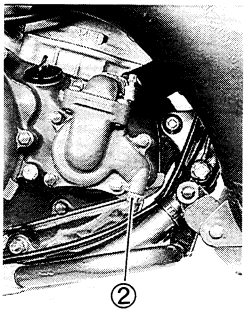

- Pour the specified engine coolant slowly up to the radiator

Engine coolant capacity: 1170 ml (1.3/1.1 US/Imp.qt)

- Tighten the radiator cap securely.

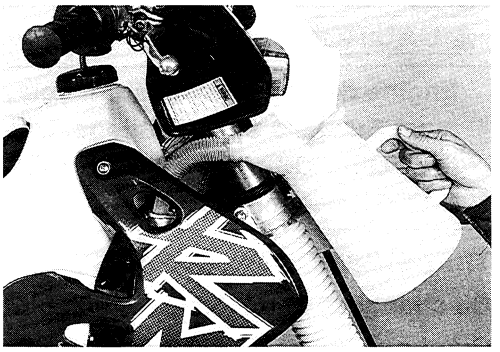

WARNING

* **Do not open the engine coolant reservoir cap when the engine is hot, as you may be injured by escaping hot liquid or vapor.**
* **Engine coolant may be harmful if swallowed or if it comes in contact with the skin or eyes. If engine coolant gets into the eyes or contacts the skin, flush the eyes or wash the skin thoroughly, with plenty of water. If engine coolant is swallowed, induce vomiting and call a physician immediately.**

RADIATOR HOSES

Check the following items.

- Engine coolant leakage.
- Radiator hose cracks and deterioration.

If any defects are found, the radiator hoses must be replaced.

DRIVE CHAIN

Inspect initially at 1000 km (600 miles, 1 month) and every 5000 km (3000 miles, 5 months) thereafter. Clean and lubricate every 1000 km (600 miles).

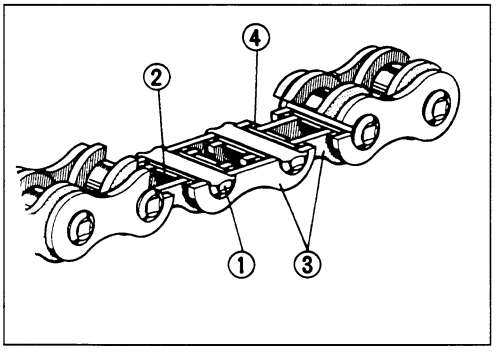

With the transmission in neutral, support the motorcycle with a jack and a wooden block and turn the rear wheel slowly by hand. Visually check the drive chain for the possible defects listed below.

* Loose pins ①
* Damaged rollers ②
* Dry or rusted links ③
* Kinked or binding links
* Excessive wear
* Improper chain adjustment
* Missing O-ring seals ④

If any defects are found, the drive chain must be replaced.

NOTE:
When replacing the drive chain, replace the drive chain and sprockets as a set.

CHECKING

- Loosen the axle nut ①.
- Tense the drive chain fully by turning both chain adjusters ②.
- Count out 21 pins (20 pitches) on the chain and measure the distance between the two points. If the distance exceeds the service limit, the chain must be replaced.

	Service Limit
Drive chain 20-pitch length	319.4 mm (12.57 in)

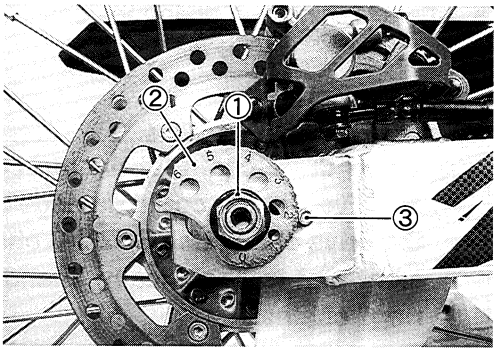

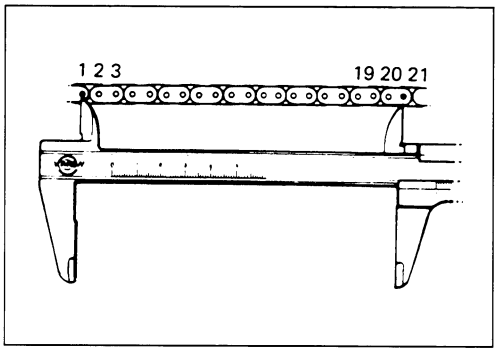

ADJUSTING

- Place the motorcycle on its side-stand for accurate adjustment.
- Turn both chain adjusters ② until the chain has 45–55 mm (1.8–2.2 in) of slack halfway between the engine and rear sprockets. Align both right and left adjusters to the same position against the stoppers ③ on the swingarm by referring to the numbers on the adjusters.
- After adjusting the drive chain, tighten the axle nut ① to the specified torque.

Rear axle nut: 110 N·m (11 kg-m, 80.5 lb-ft)

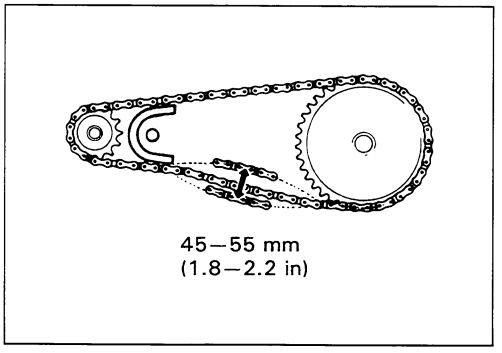

CLEANING AND LUBRICATING

- Clean the drive chain with kerosene. If the drive chain tends to rust quickly, the intervals must be shortened.

⚠ CAUTION

Do not use trichloroethylene, gasoline or any similar solvent. These fluids have too great a dissolving power for this chain and they can damage the "O-ring" seals. Use only kerosene to clean the drive chain.

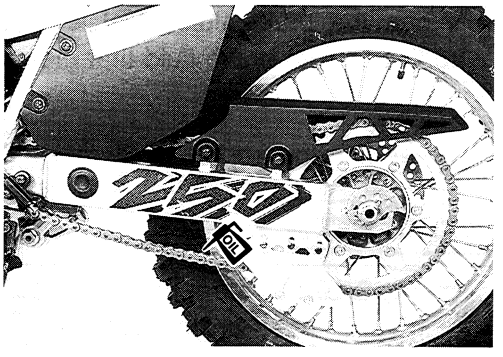

- After cleaning and drying the chain, oil it with a heavyweight motor oil.

⚠ CAUTION

*** Some drive chain lubricants contain solvents and additives which could damage the "O-ring" seals in the drive chain. Use SUZUKI chain lube or an equivalent that is specifically intended for use with "O-ring" chains.**
*** The standard drive chain is a RK520SMOZ9. SUZUKI recommends to use this standard drive chain as a replacement. Avoid using a joint clip type chain.**

BRAKES

(BRAKE)
Inspect initially at 1000 km (600 miles, 1 month) and every 5000 km (3000 miles, 5 months) thereafter.

(BRAKE HOSE AND BRAKE FLUID)
Inspect initially at 1000 km (600 miles, 1 month) and every 5000 km (3000 miles, 5 months) thereafter. Replace hose every four years. Replace fluid every two years.

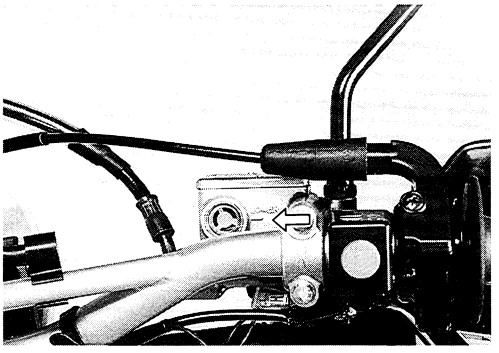

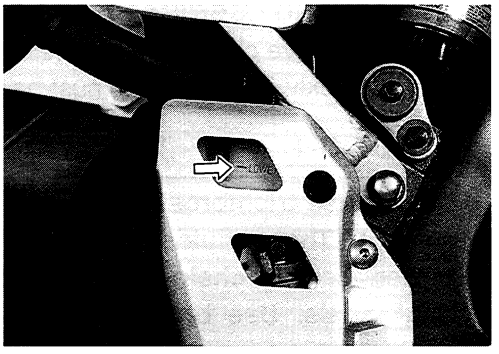

BRAKE FLUID LEVEL

- Keep the motorcycle upright and place the handlebars straight.
- Check the brake fluid level by observing the lower limit line on the front and rear brake fluid reservoir.
- When the brake fluid level is below the lower limit line, replenish with brake fluid that meets the following specification.

BF Specification and classification: DOT4

⚠ WARNING

*** The brake system of this motorcycle is filled with a glycol-based brake fluid. Do not use or mix different types of fluid such as silicone-based or petroleum-based fluids. Do not use any brake fluid taken from old, used or unsealed containers. Never reuse brake fluid left over from the last servicing or stored for a long period.**
*** Brake fluid, if it leaks, will interfere with safe running and immediately discolor painted surfaces. Check the brake hoses and hose joints for cracks and leakage before riding.**

BRAKE PADS

The extent of brake pad wear can be checked by observing the grooved limit line on the pad. When the wear exceeds the grooved limit line, replace the pads with new ones. (See pp.6-38 and 6-46.)

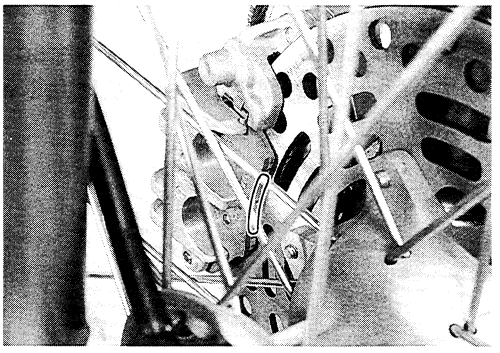

⚠ CAUTION

Replace the brake pads as a set, otherwise braking performance will be adversely affected.

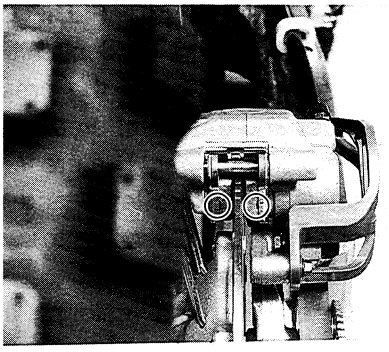

BRAKE LEVER PLAY

- Loosen the locknut ①.
- Adjust the brake lever play by turning the brake lever adjuster ② until the brake lever play Ⓐ is 0.1 –0.3 mm (0.004–0.01 in) at the front of the brake lever.

Brake lever play Ⓐ: 0.1–0.3 mm (0.004–0.01 in)

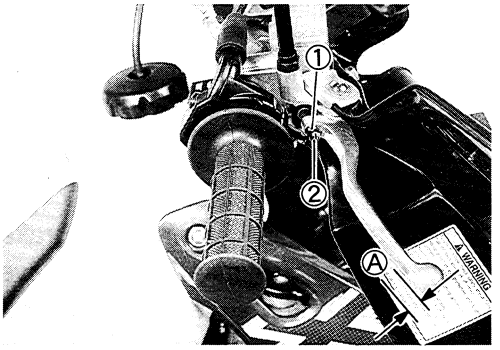

BRAKE PEDAL HEIGHT

- Loosen the locknut ①.
- Adjust the brake pedal height by turning the brake pedal adjusting bolt ② until the pedal is 0–10 mm (0–0.4 in) Ⓐ below the top face of the footrest.
- Tighten the locknut ① securely.

Brake pedal height Ⓐ: 0–10 mm (0–0.4 in)

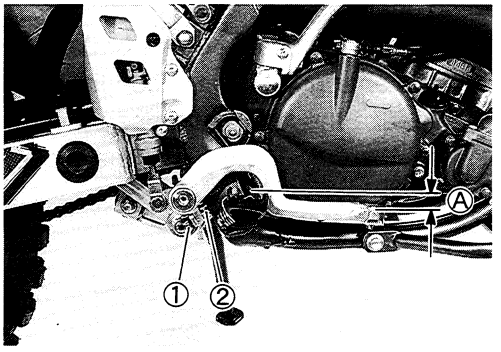

BRAKE PEDAL PLAY

- Loosen the locknut ①.
- Adjust the brake pedal play by turning the brake pedal adjusting bolt ② until the brake pedal play at the front end of the pedal is 5–15 mm (0.2–0.6 in).
- Check that the clearance Ⓐ is at least 0.5 mm (0.02 in).
- Tighten the locknut ① securely.

Brake pedal play: 5–15 mm (0.2–0.6 in)

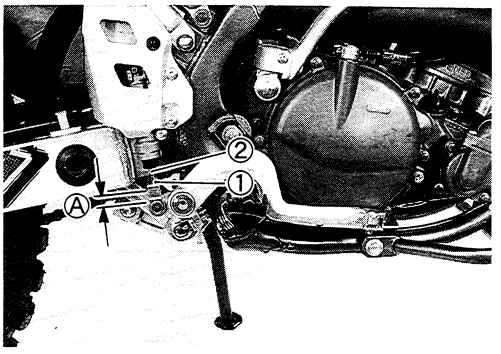

BRAKE LIGHT SWITCH

Adjust the rear brake light switch so that the brake light will come on just before pressure is felt when the brake pedal is depressed.

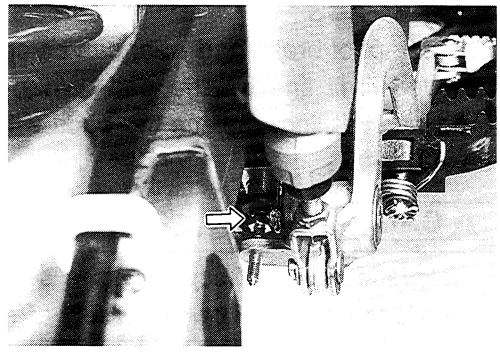

AIR BLEEDING THE BRAKE FLUID CIRCUIT

Air trapped in the brake fluid circuit acts like a cushion to absorb a large proportion of the pressure developed by the master cylinder and thus interferes with the full braking performance of the brake caliper. The presence of air is indicated by "sponginess" of the brake lever and also by lack of braking force. Considering the danger to which such trapped air exposes the machine and rider, it is essential that, after remounting the brake and restoring the brake system to the normal condition, the brake fluid circuit be purged of air in the following manner:

- Fill the master cylinder reservoir to the top of the inspection window. Replace the reservoir cap to prevent dirt from entering.
- Attach a hose to the air bleeder valve, and insert the free end of the hose into a receptacle.
- Front brake: Bleed air from the brake system.
- Squeeze and release the brake lever several times in rapid succession and squeeze the lever fully without releasing it. Loosen the air bleeder valve by turning it a quarter of a turn so that the brake fluid runs into the receptacle, this will remove the tension of the brake lever causing it to touch the handlebar grip. Then, close the air bleeder valve, pump and squeeze the lever, and open the valve. Repeat this process until the fluid flowing into the receptacle no longer contains air bubbles.

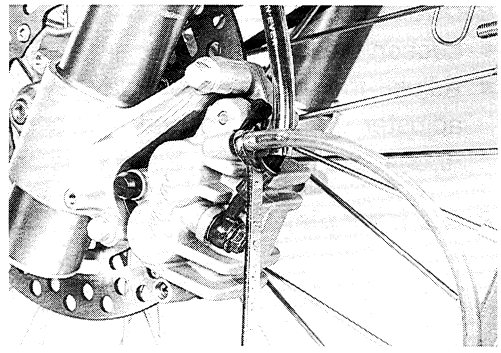

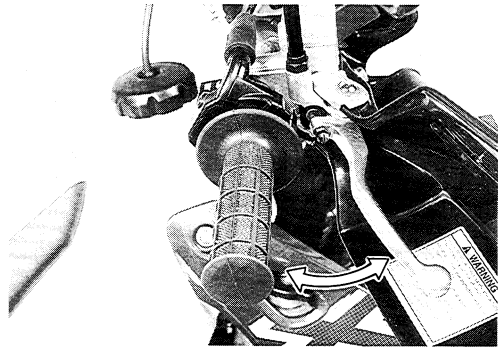

NOTE:
While bleeding the brake system, replenish the brake fluid in the reservoir as necessary. Make sure that there is always some fluid visible in the reservoir.

- Close the air bleeder valve, and disconnect the hose. Fill the reservoir with brake fluid to the top of the inspection window.

Air bleeder valve: 8 N·m (0.8 kg-m, 6.0 lb-ft)

⚠ CAUTION

Handle brake fluid with care: the fluid reacts chemically with paint, plastics, rubber materials, etc.

- Rear brake: The only difference between bleeding the front and rear brakes is that the rear master cylinder is actuated by a pedal.

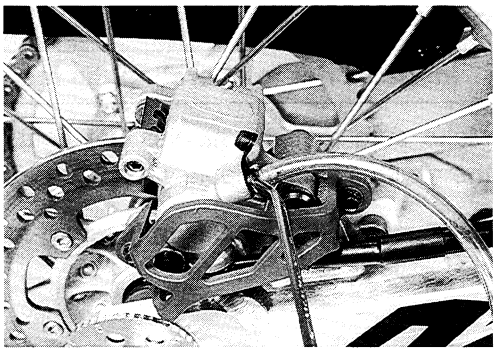

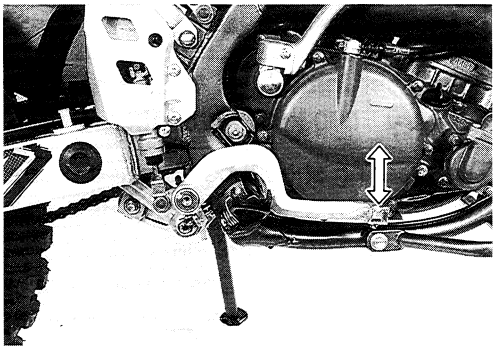

TIRES AND WHEELS

Inspect initially at 1000 km (600 miles, 1 month) and every 5000 km (3000 miles, 5 months) thereafter.

TIRE TREAD CONDITION

Operating the motorcycle with excessively worn tires will decrease riding stability and consequently invite a dangerous situation. It is highly recommended to replace a tire when the remaining depth of the tire tread reaches the following specification.

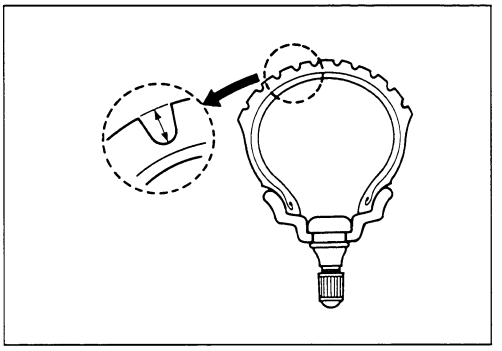

TOOL 09900-20805: Tire depth gauge

Tire tread depth limit: FRONT 4.0 mm (0.16 in)
REAR 4.0 mm (0.16 in)

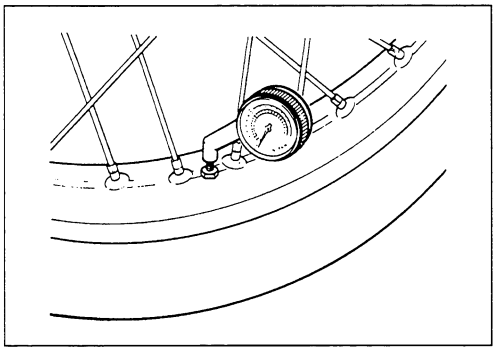

TIRE PRESSURE

It the tire pressure is too high or too low, steering will be adversely affected and tire wear will increase. Therefore, maintain the correct tire pressure for good roadability and a longer tire life. Cold inflation tire pressure is as follows.

COLD INFLATION TIRE PRESSURE	kPa	kg/cm^2	psi
FRONT AND REAR	150	1.5	22

⚠ CAUTION

The standard tire fitted on this motorcycle is a 3.00-21 51P for the front and a 120/90-18 65P for the rear. The use of tires other than those specified may cause instability. It is highly recommended to use the specified tires.

SPOKE NIPPLES

Inspect prior to operating the motorcycle.

Make sure that the nipples are tight. If necessary, retighten them with a spoke nipple wrench.

Spoke nipple: 2.5 N·m (0.25 kg-m, 1.8 lb-ft)

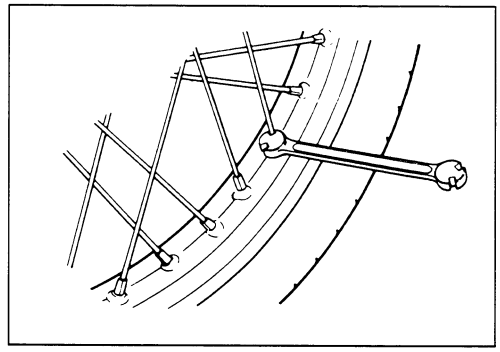

STEERING

Inspect initially at 1000 km (600 miles, 1 month) and every 5000 km (3000 miles, 5 months) thereafter.

The steering should be adjusted properly for smooth turning of the handlebars and safe operation. Overtight steering prevents smooth turning of the handlebars and too loose steering will cause poor stability. Check that there is no play in the front fork. Support the motorcycle so that the front wheel is off the ground. With the wheel facing straight ahead, grasp the lower fork tubes near the axle and pull forward. If play is found, readjust the steering. (See pp. 6-19 and 6-20.)

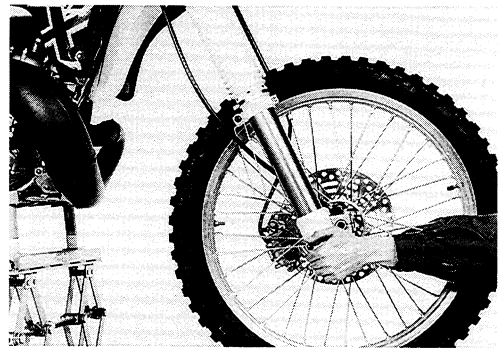

FRONT FORK

Inspect initially at 1000 km (600 miles, 1 month) and every 5000 km (3000 miles, 5 months) thereafter.

Inspect the front fork for oil leakage, scoring or scratches on the outer surface of the inner tubes. Replace any defective parts, if necessary. (See pp. 6-9 to 6-15.)

REAR SUSPENSION

Inspect initially at 1000 km (600 miles, 1 month) and every 5000 km (3000 miles, 5 months) thereafter.

Inspect the rear shock absorbers for oil leakage and check that there is no play in the swingarm.

EXHAUST PIPE BOLTS AND MUFFLER BOLTS

Tighten initially at 1000 km (600 miles, 1 month) and every 5000 km (3000 miles, 5 months) thereafter.

- Remove the frame cover (See p. 6-2.)
- Tighten the exhaust pipe mounting bolts and muffler mounting bolt.

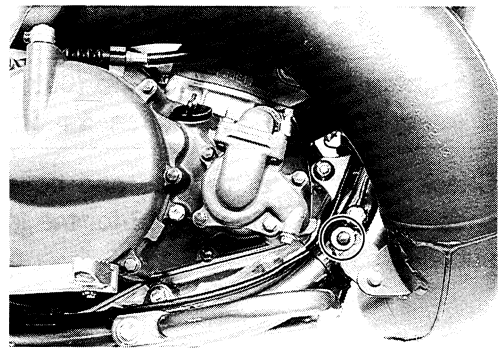

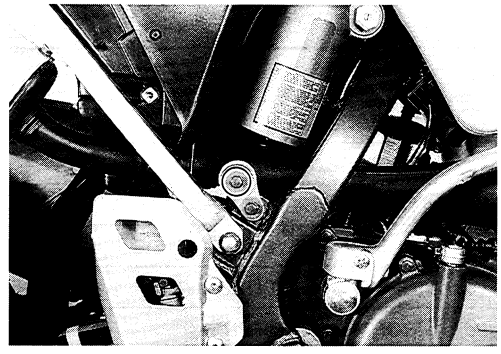

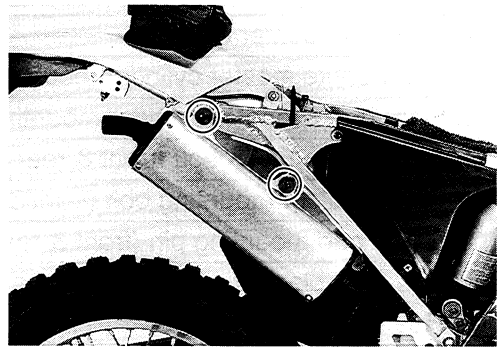

CHASSIS NUTS AND BOLTS

Tighten initially at 1000 km (600 miles, 1 month) and every 5000 km (3000 miles, 5 months) thereafter.

Check that all chassis nuts and bolts are tightened to their specified torque. (See p.2-18 for the locations of the following nuts and bolts.)

ITEM	N·m	kg-m	lb-ft
① Handlebar clamp bolt	26	2.6	19.0
② Handlebar holder nut	45	4.5	32.5
③ Front fork upper clamp bolt	26	2.6	19.0
④ Front fork lower clamp bolt	26	2.6	19.0
⑤ Steering stem head nut	90	9.0	65.0
⑥ Steering stem nut	45	4.5	32.5
⑦ Front fork cap bolt	23	2.3	16.5
⑧ Front fork center bolt	80	8.0	58.0
⑨ Front brake master cylinder mounting bolt	10	1.0	7.0
⑩ Rear brake master cylinder mounting bolt	10	1.0	7.0
⑪ Brake hose union bolt (front & rear)	23	2.3	16.5
⑫ Brake caliper mounting bolt (front & rear)	26	2.6	19.0
⑬ Brake pad mounting pin (front & rear)	18	1.8	13.0
⑭ Brake air bleeder valve (front & rear)	8	0.8	6.0
⑮ Rear brake pedal bolt	29	2.9	21.0
⑯ Brake disc bolt (front & rear)	10	1.0	7.0
⑰ Front axle	65	6.5	47.0
⑱ Front axle holder bolt	18	1.8	13.0
⑲ Seat rail mounting bolt (upper)	26	2.6	19.0
⑳ Seat rail mounting bolt (lower)	23	2.3	16.5
㉑ Rear axle nut	110	11.0	79.5
㉒ Rear sprocket nut	28	2.8	20.0
㉓ Drive chain roller mounting bolt	41	4.1	29.5
㉔ Spoke nipple (front & rear)	2.5	0.25	1.8
㉕ Swingarm pivot nut	79	7.9	57.0
㉖ Rear shock absorber mounting nut (upper & lower)	55	5.5	40.0
㉗ Cushion lever mounting nut (center)	100	10.0	72.5
㉘ Cushion lever mounting nut (front)	80	8.0	58.0
㉙ Cushion rod mounting nut	100	10.0	72.5

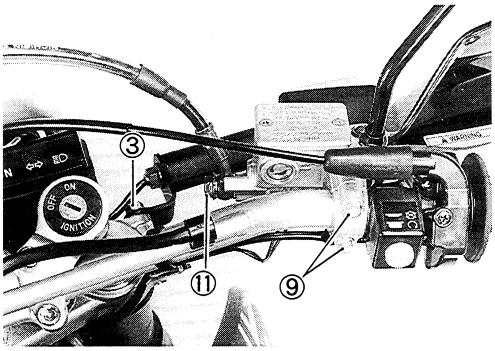
③
⑪
⑨

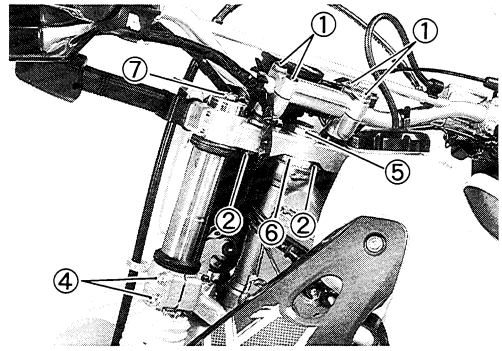
①
①
⑦
⑤
②
⑥
②
④

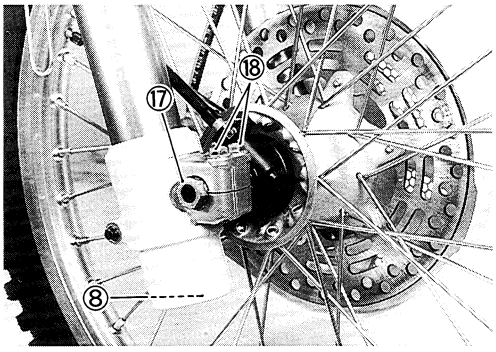
⑱
⑰
⑧

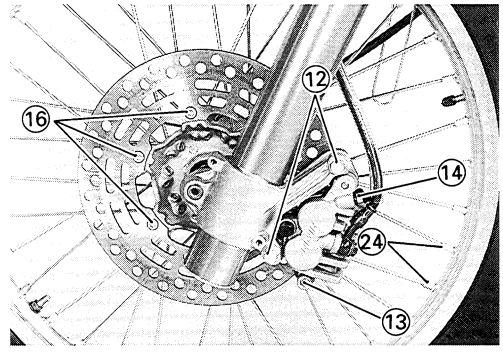
⑫
⑯
⑭
㉔
⑬

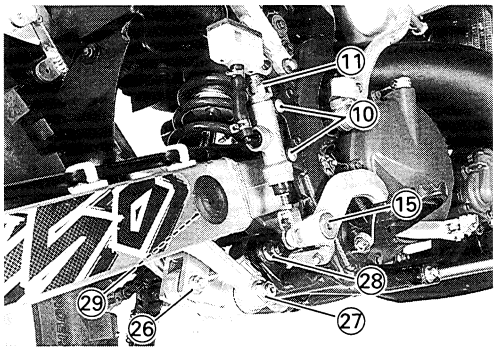
⑪
⑩
⑮
㉘
㉙
㉖
㉗

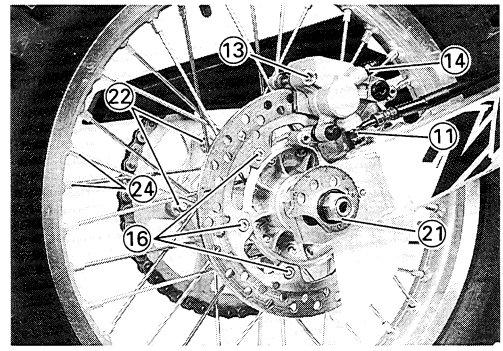
⑬
⑭
㉒
⑪
㉔
㉑
⑯

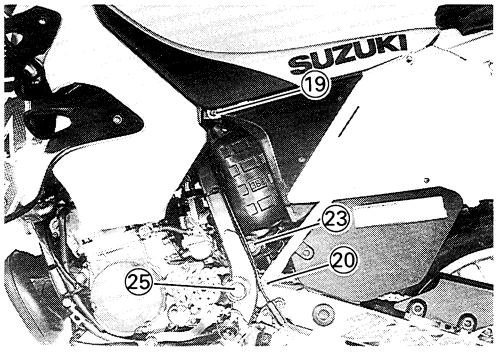
SUZUKI
⑲
㉓
⑳
㉕

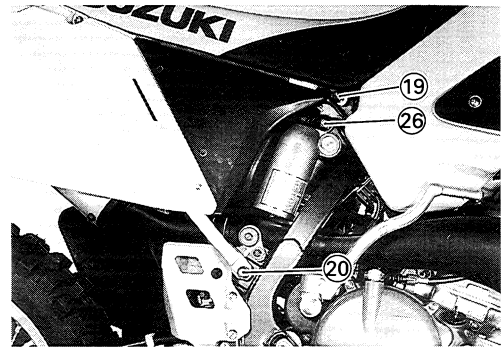
⑲
㉖
⑳

ENGINE

CONTENTS

ENGINE COMPONENTS REMOVABLE WITH THE ENGINE IN PLACE 3- 1
ENGINE REMOVAL AND INSTALLATION 3- 2
ENGINE DISASSEMBLY 3- 7
ENGINE COMPONENTS INSPECTION AND SERVICE 3-15
BEARINGS 3-15
OIL SEALS 3-16
CYLINDER HEAD 3-18
CYLINDER 3-18
PISTON 3-19
CLUTCH 3-21
GEARSHIFT FORK 3-22
CONROD 3-23
CRANK 3-23
ENGINE REASSEMBLY 3-24
CRANKSHAFT 3-24
TRANSMISSION AND GEAR SHIFT FORK 3-25
CRANKCASE 3-28
GENERATOR ROTOR 3-29
GEARSHIFT SHAFT 3-30
KICK STARTER 3-32
CLUTCH 3-34
PISTON, CYLINDER, CYLINDER HEAD AND EXHAUST VALVE ... 3-36

ENGINE COMPONENTS REMOVABLE WITH ENGINE IN PLACE

The parts listed below can be removed and reinstalled without removing the engine from the frame. Refer to the page listed in each section for removal and reinstallation instructions.

ENGINE LEFT SIDE

PARTS	REMOVAL	INSTALLATION
Engine sprocket	3-3	3-6
Magneto rotor	3-12	3-29
Stator coil	3-13	3-29
Carburetor	4-4	4-6
Engine sprocket cover	3-3	3-5

ENGINE RIGHT SIDE

PARTS	REMOVAL	INSTALLATION
Water pump	5-8, 9	5-10
Primary driven gear	3-11	3-31
Clutch cover	3-9	3-35
Clutch pressure, drive and driven plates	3-9	3-35
Clutch sleeve hub	3-9	3-35
Starter idle gear	3-11	3-24
Exhaust valve governor	3-10	3-33
Gearshift shaft	3-11	3-31
Gearshift cam driven gear	3-12	3-30
Kick crank	3-4	3-5
Kick starter	3-11	3-32

ENGINE CENTER

PARTS	REMOVAL	INSTALLATION
Exhaust pipe	3-4	3-5
Cylinder head	3-7	3-40
Cylinder and exhaust valve	3-7	3-38, 39
Thermostat	5-6	5-7
Piston	3-8	3-38
Radiators	5-4	5-5

ENGINE REMOVAL AND INSTALLATION

ENGINE REMOVAL

Before taking the engine out of the frame, wash the engine using a steam cleaner. Engine removal is sequentially explained in the following steps. Reinstall the engine by reversing the removal procedure.

- Drain the transmission oil. (See p. 2-7.)

- Remove the fuel tank. (See p. 4-2.)
- Remove the radiators. (See pp. 5-4 and 5-5.)
- Remove the carburetor. (See p. 4-4.)
- Disconnect the neutral switch lead wire ①.

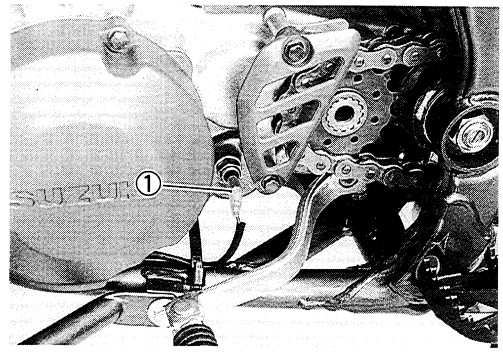

- Remove the clamps and disconnect the CDI unit couplers ②.
- Remove the spark plug. (See p. 2-3.)

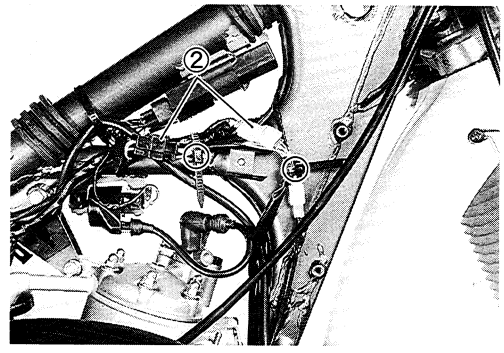

- Disconnect the breather hose (engine side) ③.

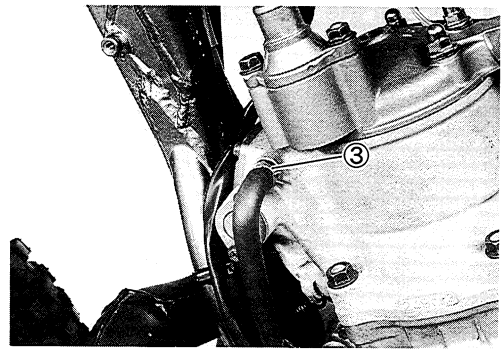

- Remove the exhaust pipe ①.

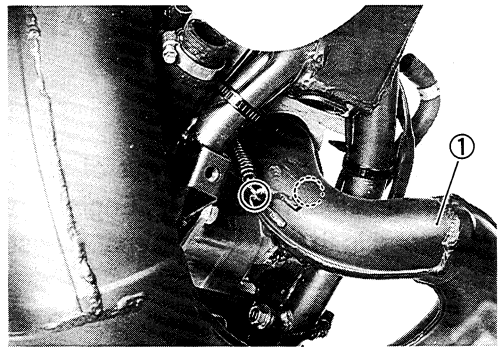

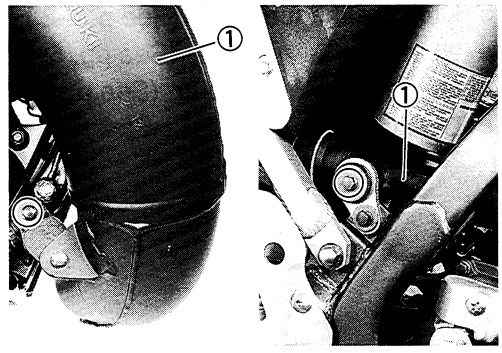

- Remove the engine sprocket cover ② and gearshift lever ③.

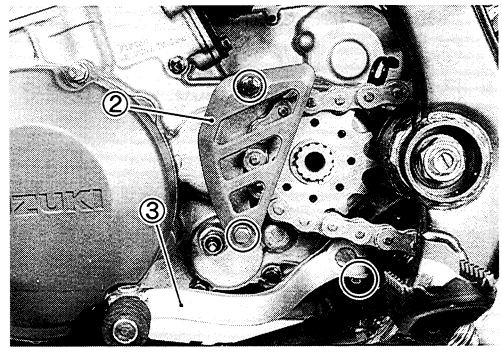

- Loosen the rear axle nut and make sure the drive chain has enough slack ④.

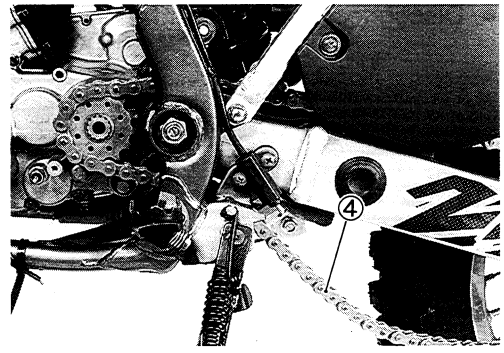

- Remove the circlip ⑤ and engine sprocket ⑥.

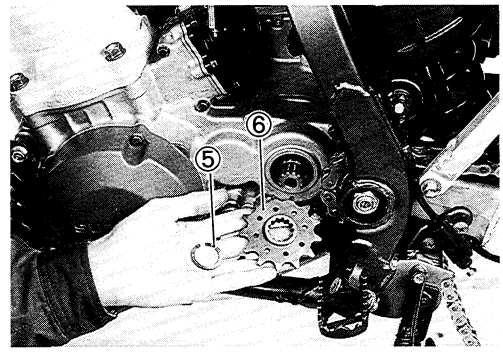

- Remove the kick crank ① and brake pedal ②.
- Disconnect the clutch cable ③.

NOTE:
Remove the cotter pin before removing the brake pedal

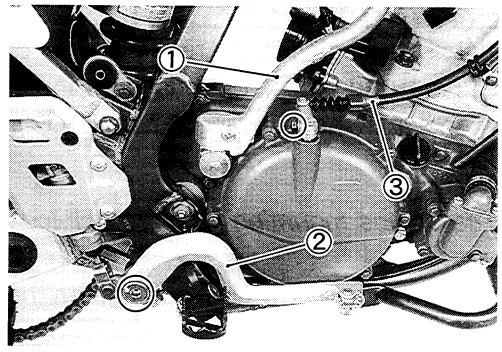

- Remove the engine mounting bolts and engine mounting plates.
- Partially remove the pivot shaft so that the engine can be removed.

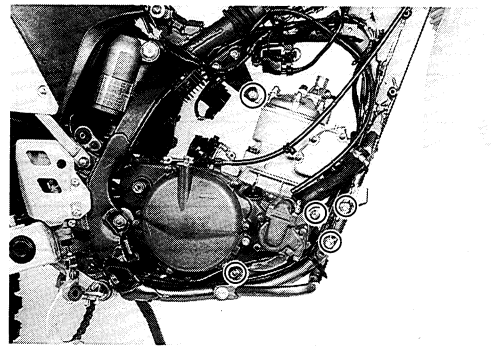

⚠ CAUTION

Do not remove the pivot shaft completely. Pull it only enough so that the engine can be removed and that the swingarm pivot holes and frame holes stay aligned.

- Gradually lower the engine.

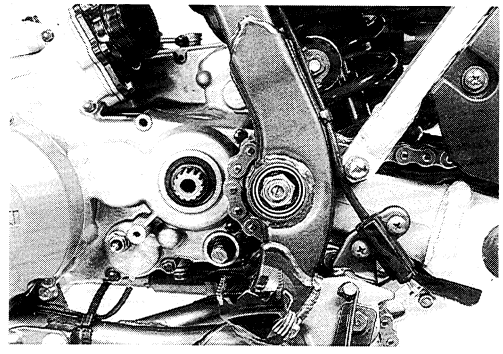

ENGINE INSTALLATION

Install the engine in the reverse order of engine removal.

- Insert the two long bolts from the left side. Install the brackets, spacer, bolts, and nuts properly, as shown in the following illustration.

NOTE:

The engine mounting nuts are self-locking. Once the nuts have been removed, they are no longer of any use.

Be sure to use new nuts and tighten them to the specified torque.

ITEM	N·m	kg-m	lb-ft
①, ⑥, ⑦	41	4.1	29.5
②, ③, ④, ⑤	43	4.3	31.0
⑧	79	7.9	57.0

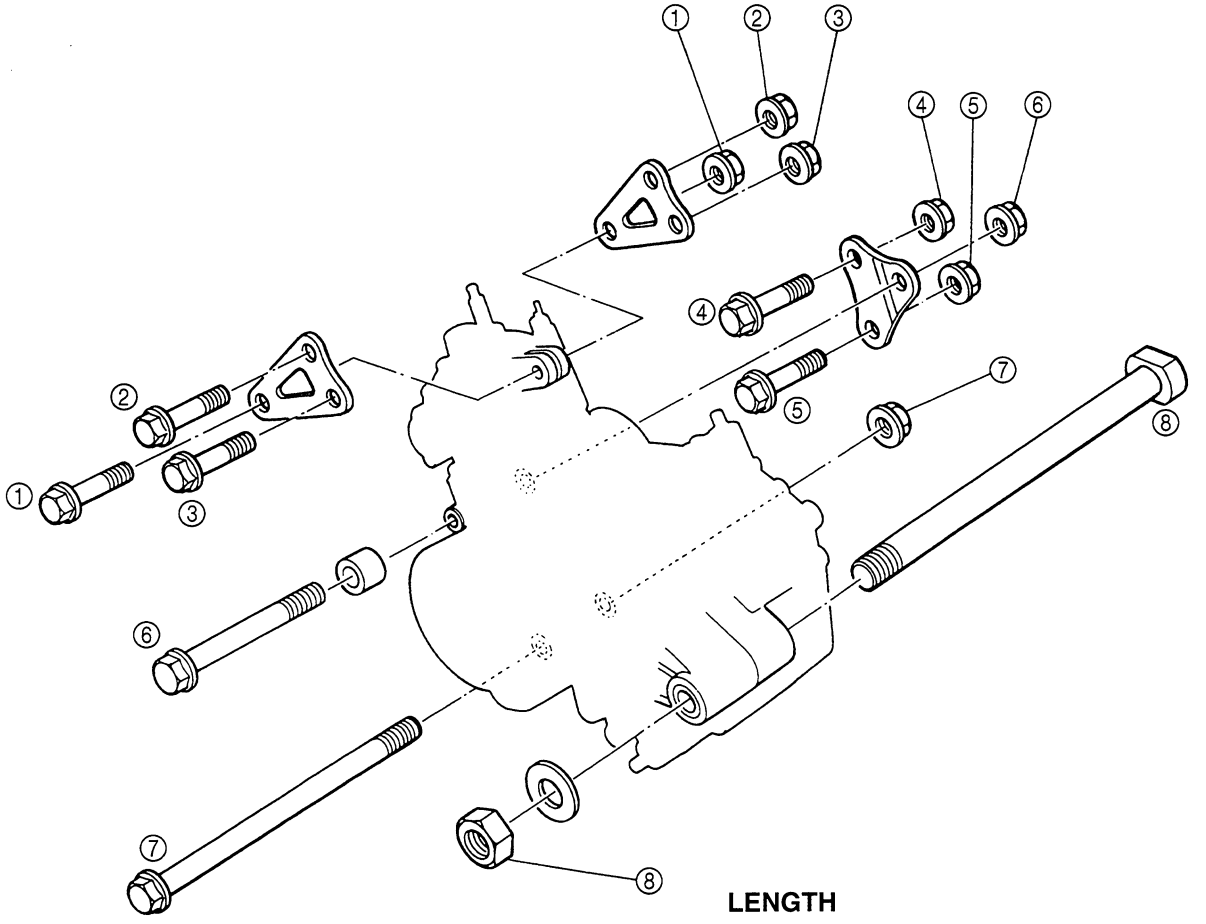

LENGTH

①, ②, ③	45 mm (1.8 in)
④, ⑤	50 mm (2.0 in)
⑥	102 mm (4.0 in)
⑦	137 mm (5.4 in)
⑧	—

- Install the engine sprocket.

NOTE:
Install the engine sprocket with the flat side facing away from the engine.

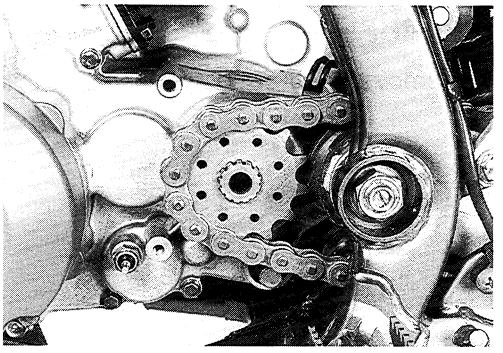

- After remounting the engine, route the wire harness, cables, and hoses properly. (See pp. 8-8 to 8-12.)

- Adjust the following items to specification.
* Engine coolant (See pp. 2-8 and 2-9.)
* Throttle cable play (See p. 2-6.)
* Engine idle speed (See p. 2-6.)
* Drive chain (See pp. 2-9 and 2-10.)
* Clutch cable play (See p. 2-7.)
* Brake pedal play (See p. 2-12)

- Pour 0.65 L (0.7/0.6 US/Imp qt) of SF or SG classified (API) engine oil, with a viscosity rating of 10W40 (SAE), into the engine after overhauling it.
- Start up the engine and allow it run for several minutes at idle speed and then stop the engine. Wait a few minutes and then check that the oil level. (See p. 2-7.)

Transmission oil (engine oil) change	650 ml (0.7/0.6 US/Imp qt)
Transmission oil (engine oil) overhaul	750 ml (0.8/0.7 US/Imp qt)

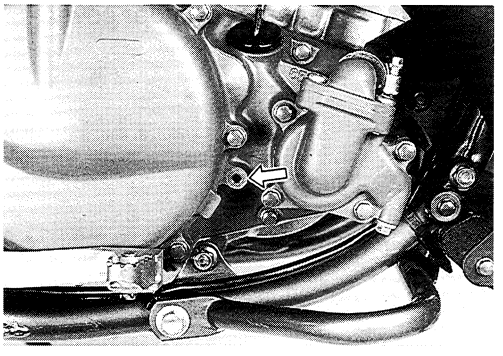

ENGINE DISASSEMBLY

- Remove the thermostat case and cylinder head.

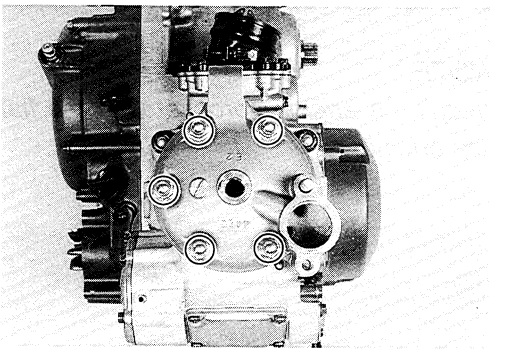

- Remove the right side cylinder cover.
- Disconnect the exhaust valve rod (upper side).

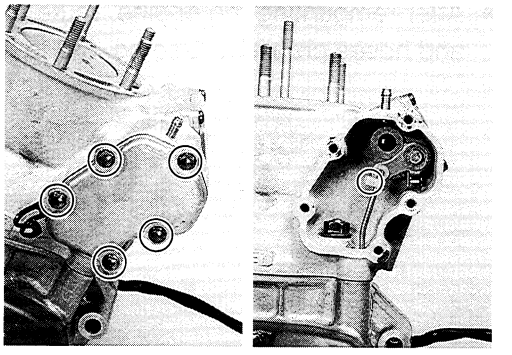

- Remove the cylinder.

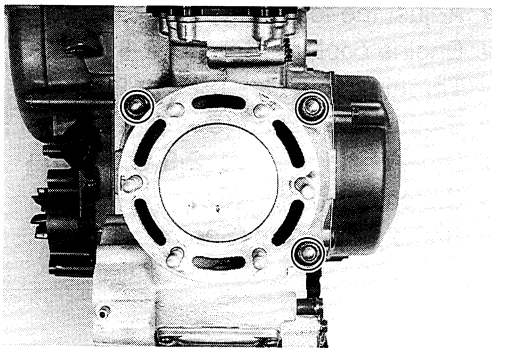

- Remove the center cylinder cover.

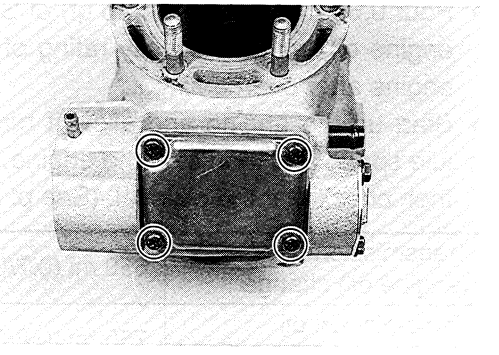

- Remove the exhaust valve bolt ①, exhaust valve levers ②, collar ③, spring ④, and stopper washer ⑤.

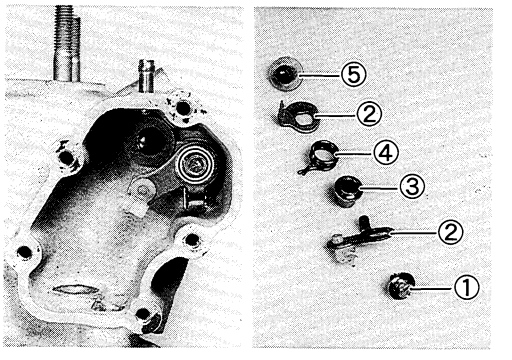

- Remove the exhaust valve retainer ①, cap ②, and return spring ③.

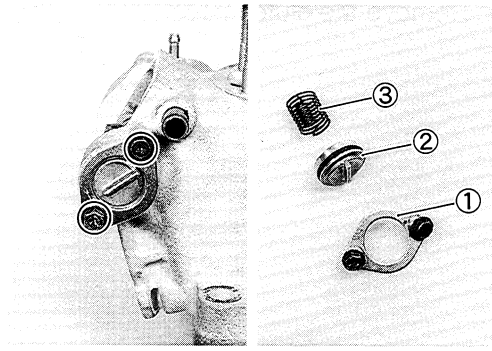

- Pull the exhaust valve shaft ④ before loosing the exhaust valve shaft stopper ⑤.
- Remove the exhaust valve arm ⑥.

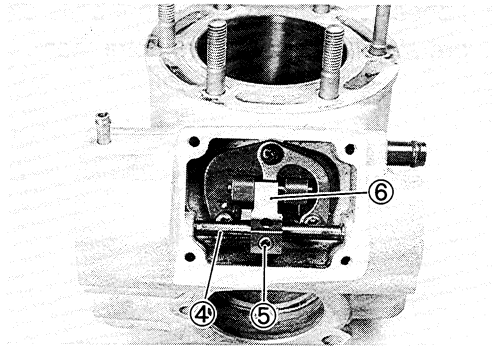

- Remove the exhaust valve stopper ⑦, spring retainer ⑧, and middle spring ⑨.

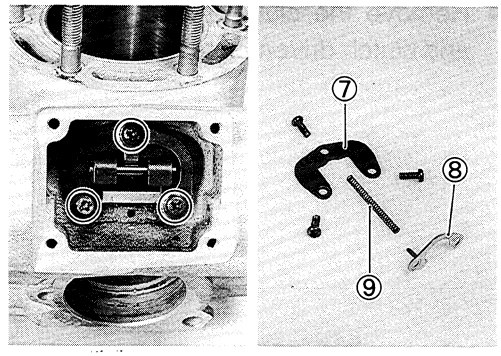

- Remove the exhaust valve.

⑩ Exhaust valve lower
⑪ Exhaust valve middle
⑫ Exhaust valve guide

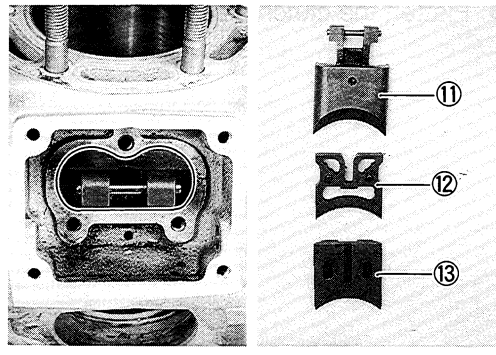

- Remove the piston pin circlip ⑬.
- Remove the piston pin ⑭ and piston ⑮.

NOTE:
Place a clean rag over the cylinder to prevent the piston pin circlip from dropping into the crankcase.

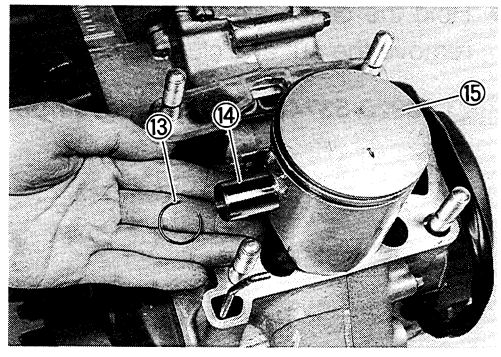

- Remove the clutch cover.

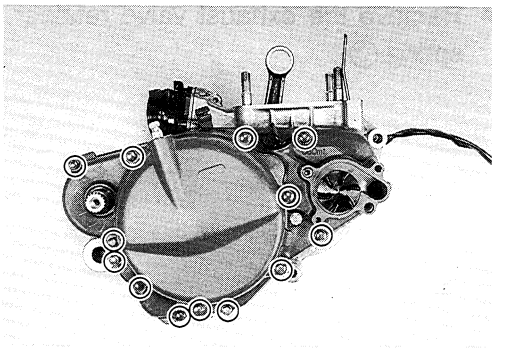

- Loosen the clutch spring set bolts diagonally and when they are all fully loosened, remove them.

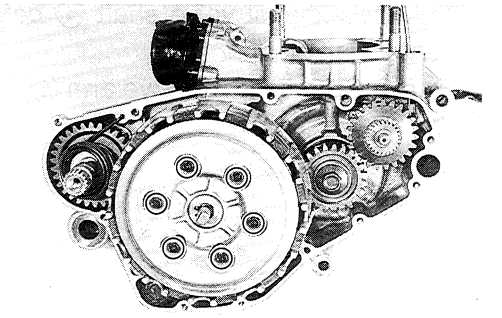

- Remove the clutch pressure plate ①, clutch drive plates, and clutch driven plates.

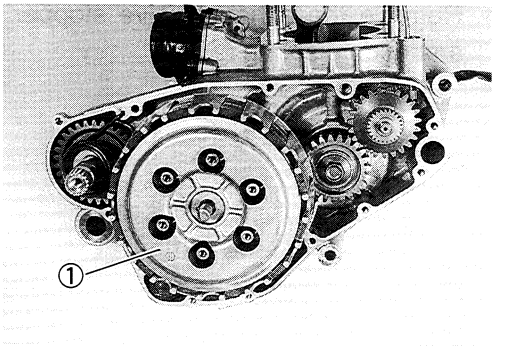

- Flatten the clutch sleeve hub washer.

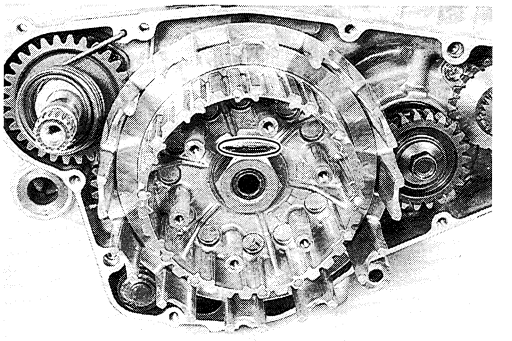

- Hold the clutch sleeve hub using the special tool and then remove the nut and clutch sleeve hub washer.

TOOL 09920-53740: Clutch sleeve hub holder

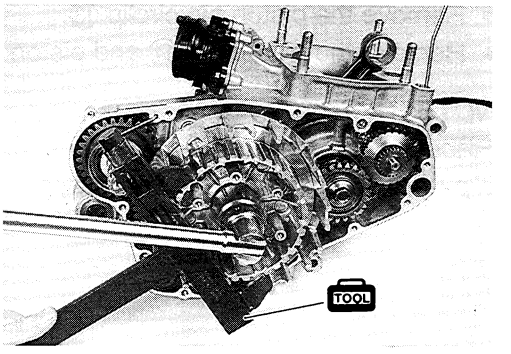

- Remove the clutch sleeve hub ①.

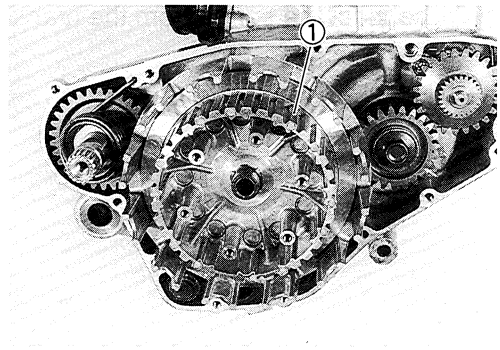

- Remove the thrust washer ② and clutch housing ③.

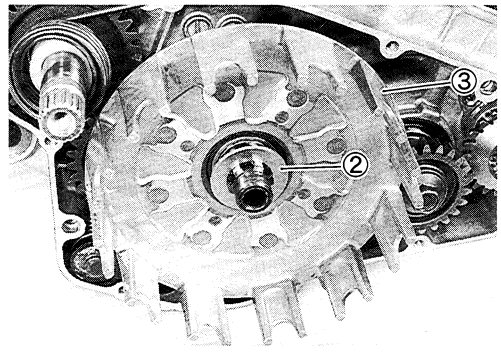

- Remove the collar ④ and bearing ⑤.

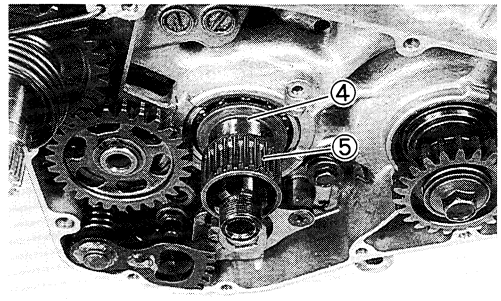

- Remove the exhaust valve governor ⑥, and bearing ⑦.

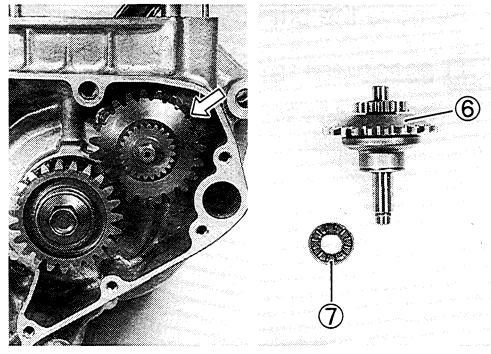

- Disconnect the exhaust valve rod (lower side) after removing the exhaust valve actuator assembly.

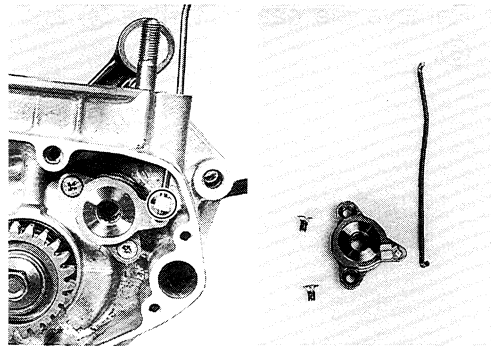

- Disconnect the spring from the crankcase.

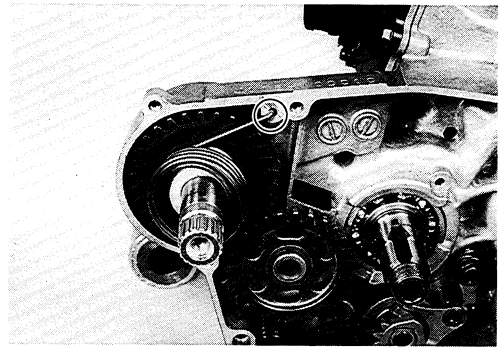

- Remove the kick starter drive gear ①, guide ②, and spring ③.

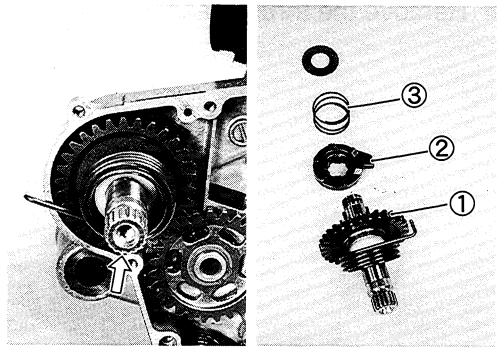

- Remove the magneto rotor cover.

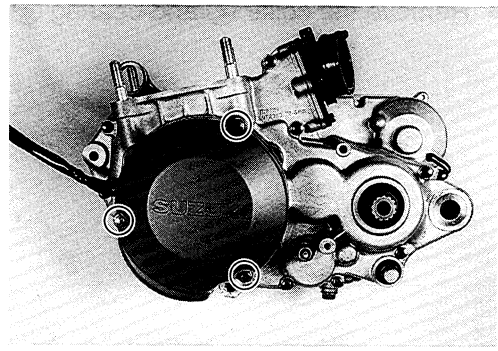

- Remove the primary drive gear using the special tools.

TOOL 09930-40113: Rotor holder
09930-40131: Rotor holder attachment

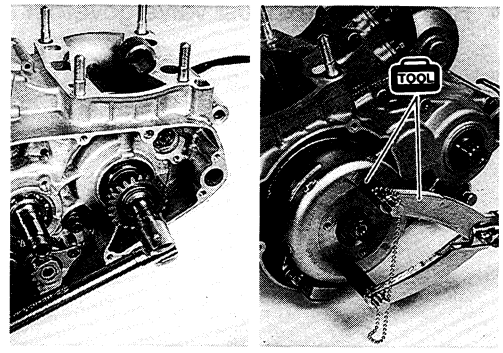

- Remove the gearshift shaft ④ and gearshift shaft stopper ⑤.

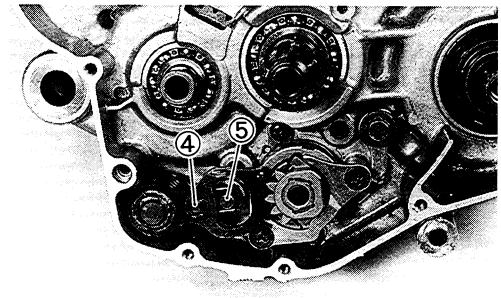

- Remove the gearshift cam driven gear ① and gearshift cam pawl lifter ②.

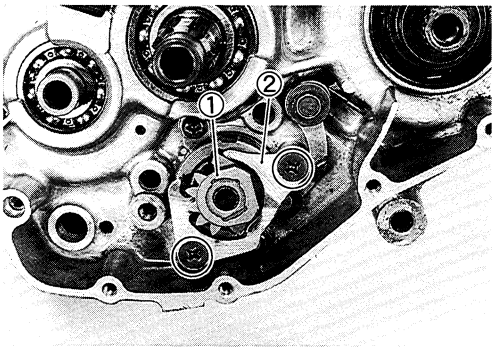

- Remove the gearshift cam stopper assembly.

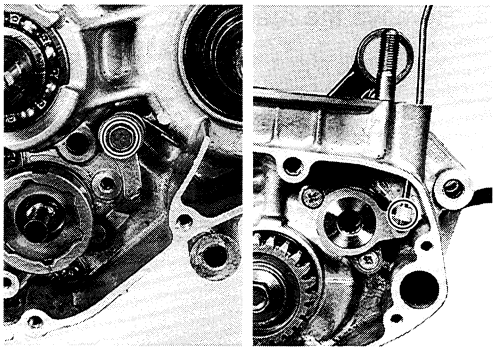

- Remove the gearshift cam driven gear pin ③.

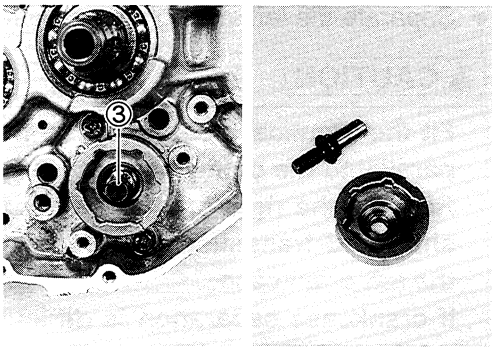

- Remove the magneto rotor nut using the special tools.

TOOL 09930-40113: Rotor holder
09930-40131: Rotor holder attachment

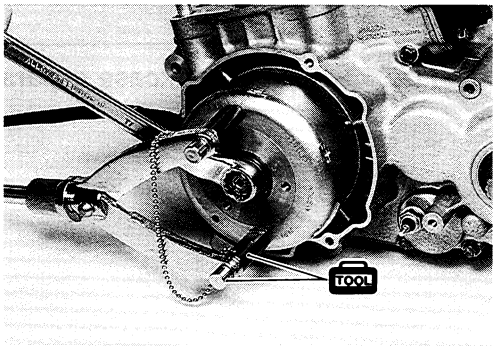

- Remove the magneto rotor using the special tools.

TOOL 09930-30713: Flywheel rotor remover
09930-40113: Rotor holder
09930-40131: Rotor holder attachment

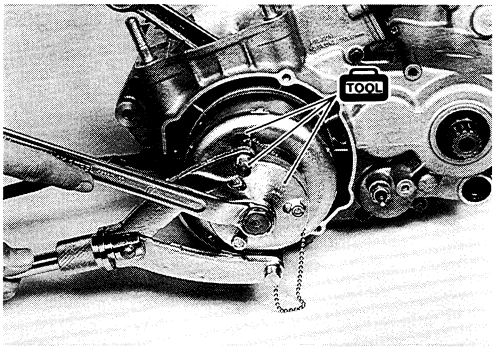

- Remove the stator coil assembly.

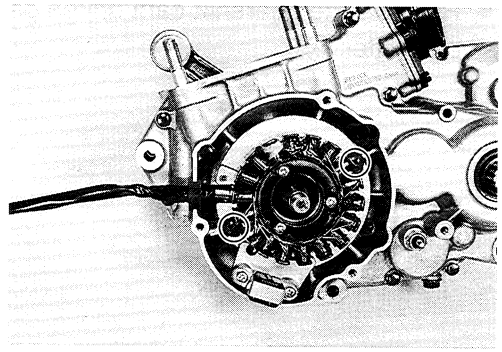

- Remove the reed valve.

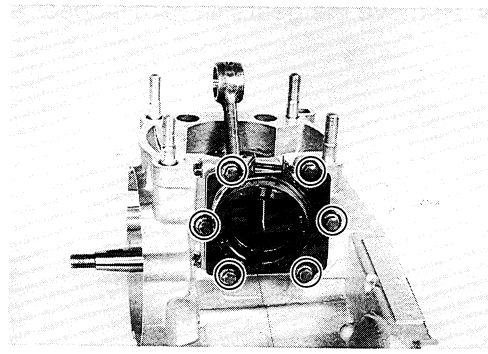

- Separate the left and right crankcases using the special tool.

⚠ CAUTION

Fit the crankcase separator so that the tool arms are parallel to the crankcase.
Remove the right crankcase from the left. The crankshaft and transmission components must remain in the left crankcase.
If crankcase separation is difficult, lightly tap on the reinforced areas of the crankcase with a plastic hammer.

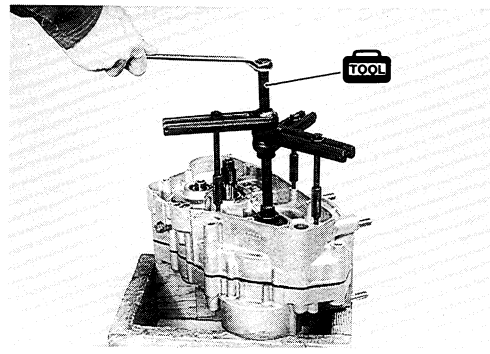

TOOL 09920-13120: Crankcase separator

- Remove the gearshift cam ①, gearshift forks ②, and th gearshift fork shafts ③.

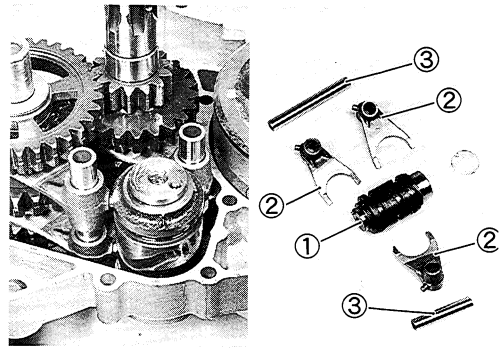

- Remove the countershaft ④ and driveshaft ⑤.

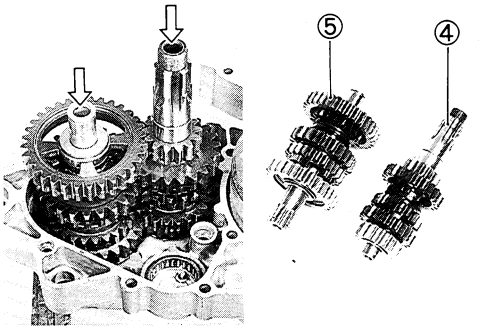

- Remove the crankshaft using the special tool.

TOOL 09920-13120: Crankcase separator

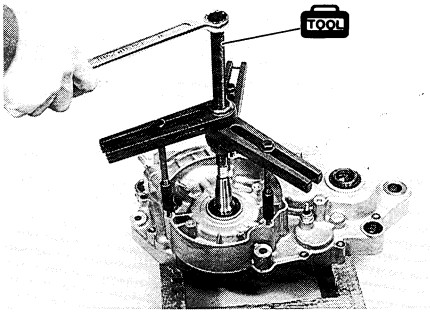

ENGINE COMPONENTS INSPECTION AND SERVICE

BEARINGS

Wash each bearing with a cleaning solvent and lubricate them with motor oil before inspection. Turn each inner ring and check to see that it turns smoothly. If it does not turn quietly and smoothly, the bearing is defective and must be replaced with a new one.

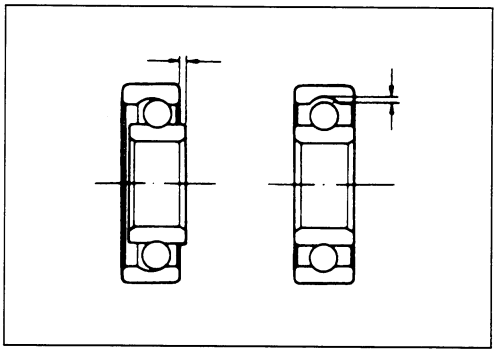

RIGHT DRIVESHAFT BEARING AND LEFT COUNTERSHAFT BEARING

- Remove the right driveshaft bearing and left countershaft bearing using the special tools.

TOOL 09923-73210: Bearing remover
09930-30102: Sliding shaft

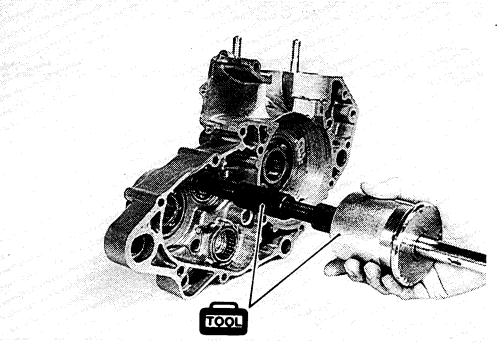

⚠ CAUTION

The removed bearings should be replaced with new ones.

- Install the new right driveshaft bearing and left countershaft bearing using the special tool.

TOOL 09922-55131: Bearing installer

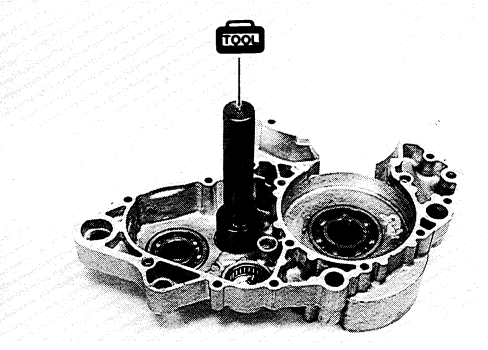

LEFT DRIVESHAFT BEARING AND RIGHT COUNTERSHAFT BEARING

- Remove the left driveshaft bearing and right countershaft bearing using the special tools.

TOOL 09923-74510: Bearing remover
09930-30120: Sliding shaft

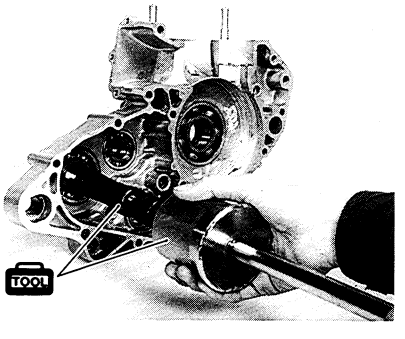

⚠ CAUTION

The removed bearing should be replaced with a new one.

- Install the new left driveshaft bearing and right countershaft bearing using the special tool.

TOOL 09913-75810: Bearing remover

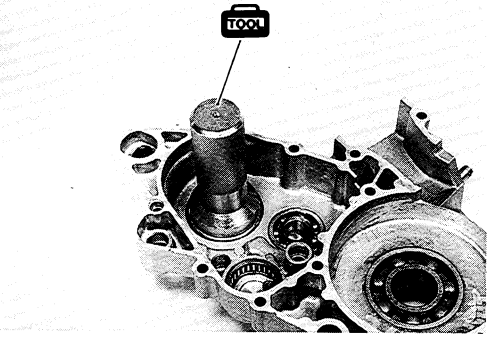

CRANKSHAFT BEARINGS

- Remove the crankshaft bearings using the special tools.

TOOL 09923-74510: Bearing remover
09930-30120: Sliding shaft

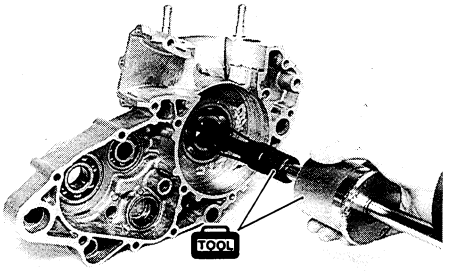

⚠ CAUTION

The removed bearing should be replaced with a new one.

- Install the new crankshaft bearings using the special tool.

TOOL 09913-85210: Bearing installer

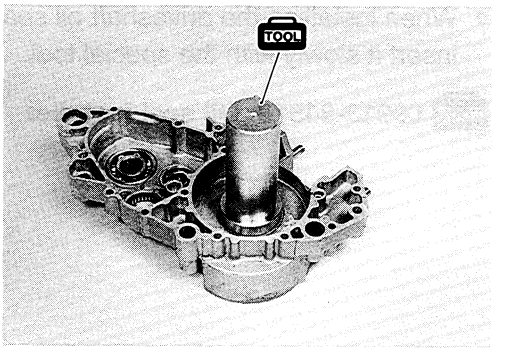

OIL SEALS

Damage to an oil seal lip may result in leakage of the air/fuel mixture or transmission oil. Inspect all of the oil seals and if any are damaged, replace them with a new one.

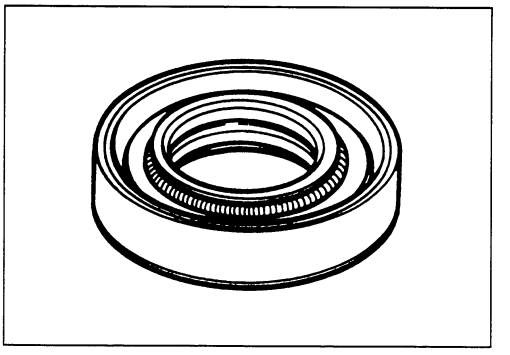

Install the oil seals into the crankcase as shown.

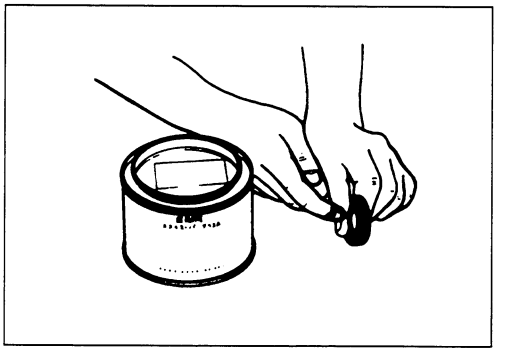

⚠ CAUTION

The removed oil seal should be replaced with a new one.

- Apply SUZUKI SUPER GREASE "A" to the oil seal lips.

99000-25010: SUZUKI SUPER GREASE "A"

DRIVESHAFT OIL SEAL

- Remove the driveshaft oil seal from the left crankcase using the special tool.

TOOL 09913-50121: Oil seal remover

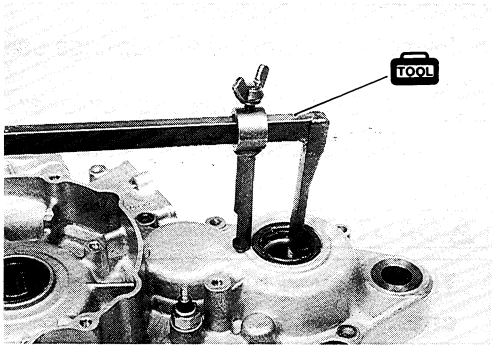

⚠ CAUTION

The removed oil seal should be replaced with a new one.

- When installing the driveshaft oil seal into the left crankcase, insert it slowly with the special tool.

TOOL 09913-84510: Oil seal installer

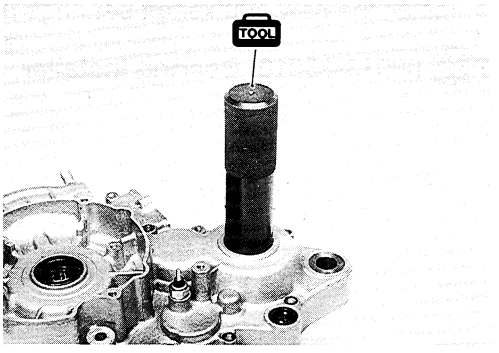

CRANKSHAFT OIL SEALS

- Remove the crankshaft oil seals from the left and right crankcase, using the special tool.

TOOL 09913-50121: Oil seal remover

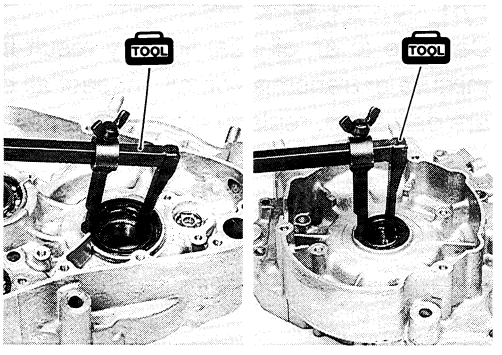

⚠ CAUTION

The removed oil seals should be replaced with new ones.

- When installing the crankshaft oil seal into the left and right crankcases, insert it slowly with the special tools.

TOOL 09913-80112: Oil seal installer (left side)
09913-70122: Oil seal installer (right side)

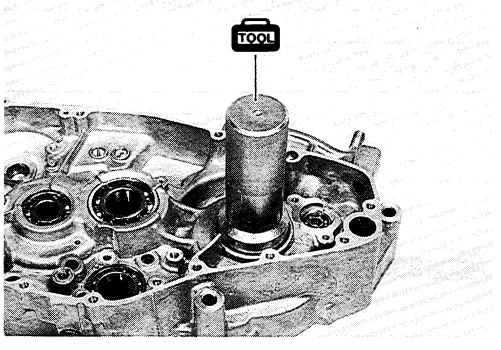

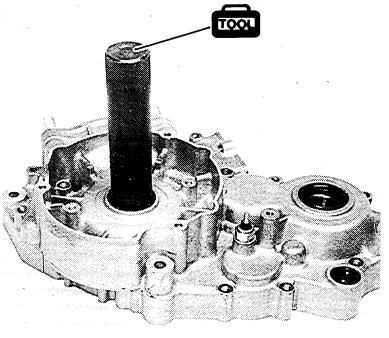

CYLINDER HEAD

Remove carbon from the combustion chamber and clean the cylinder head.

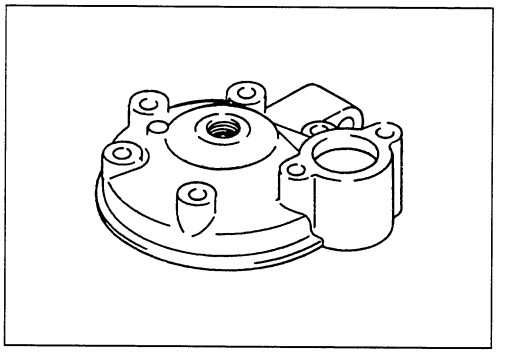

CYLINDER HEAD DISTORTION

Check the gasket surface of the cylinder head for distortion. Use a straightedge and thickness gauge. Take clearance readings at several places. If any clearance reading exceeds the service limit, replace the cylinder head.

TOOL 09900-20803: Thickness gauge

Service Limit
Cylinder head distortion: 0.05 mm (0.002 in)

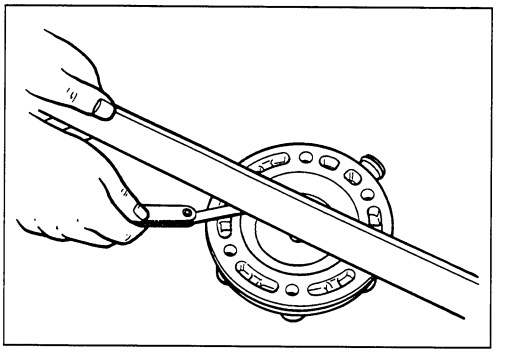

CYLINDER

Remove carbon from the exhaust port and the upper part of the cylinder. Do not damage the surface of the cylinder wall.

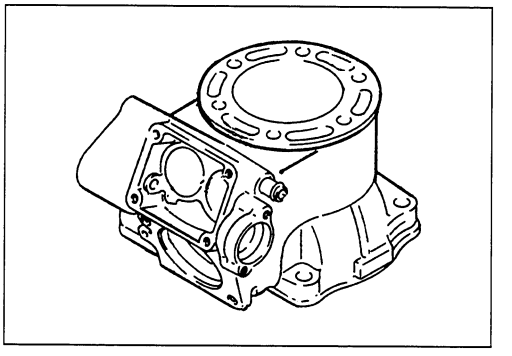

CYLINDER BORE

Measure the cylinder bore with the cylinder gauge at 20 mm (0.8 in) from the top of the cylinder.

TOOL 09900-20508: Cylinder gauge set

Standard
Cylinder bore: 67.000–67.015 mm (2.6377–2.6384 in)

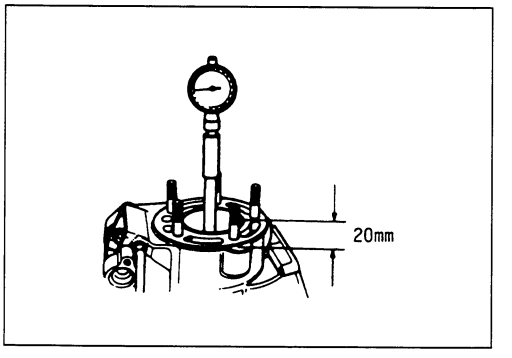

CYLINDER BLOCK DISTORTION

Check the gasket surface of the cylinder for distortion. Use a straightedge and thickness gauge. Take clearance readings at several places. If any clearance reading exceed the service limit, replace the cylinder.

TOOL 09900-20803: Thickness gauge

Service Limit
Cylinder distortion: 0.05 mm (0.002 in)

PISTON

PISTON DIAMETER

Measure the piston diameter with the micrometer at 24 mm (0.94 in) from the skirt end.
If the piston diameter is less than the service limit, replace the piston.

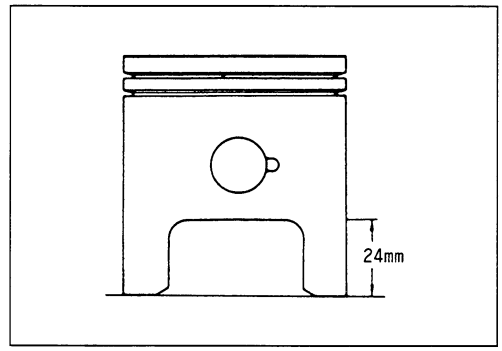

TOOL 09900-20203: Micrometer (50–75 mm)

Service Limit
Piston diameter: 68.880 mm (2.7118 in)

CARBON REMOVAL

Remove the carbon from the crown of the piston and piston ring grooves. After cleaning the piston ring grooves, install the piston rings and rotate them in their respective grooves to be sure that they move smoothly.
Carbon in a piston ring groove can cause the piston ring to get stuck, reducing engine power output.
Also, replace the piston if it is scuffed.

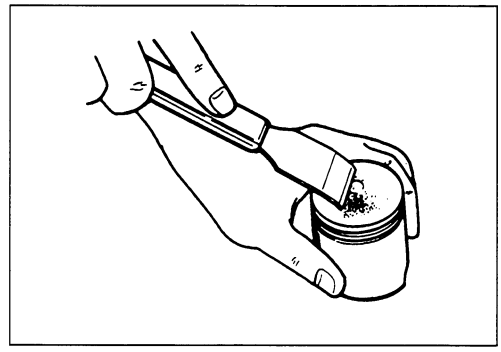

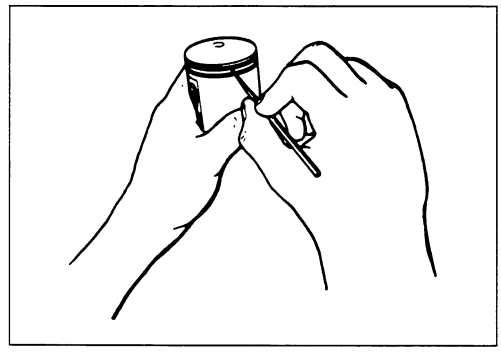

PISTON-TO-CYLINDER CLEARANCE

Subtract the piston diameter from the cylinder bore. If the piston-to-cylinder clearance exceeds the service limit, rebore the cylinder and use an oversized piston, or replace both the cylinder and the piston.

Service Limit
Piston-to-cylinder clearance: 0.12 mm (0.0047 in)

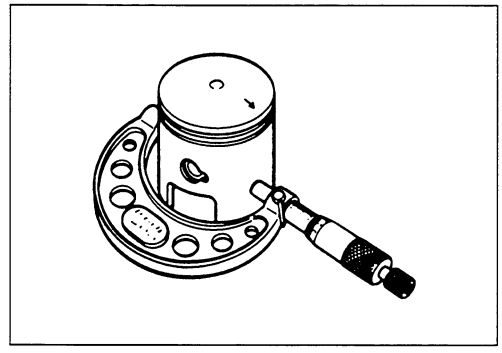

PISTON PIN AND PISTON PIN BORE

Measure the piston pin bore inside diameter and use a micrometer to measure the piston pin outside diameter. If either is out of specification or the difference between these two measurements is more than the limits, replace both the piston and piston pin.

TOOL 09900-20605: Dial calipers

Service Limit
Piston pin bore: 18.030 mm (0.7098 in)

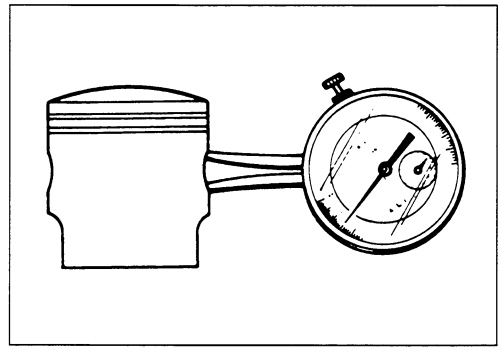

PISTON PIN O.D.

Measure the piston pin outside diameter at three positions using the micrometer. If any of the measurements are out of specification, replace the piston and piston pin.

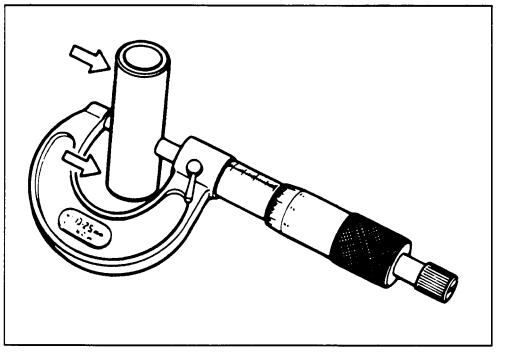

TOOL 09900-20205: Micrometer (0–25 mm)

Service Limit
Piston pin O.D.: 17.980 mm (0.7079 in)

PISTON RING-TO-GROOVE CLEARANCE

Install the piston rings into the piston ring grooves. Insert the thickness gauge under each piston ring and measure the piston ring side clearance.
If any of the measurements exceed the service limit, replace both the piston and piston rings.

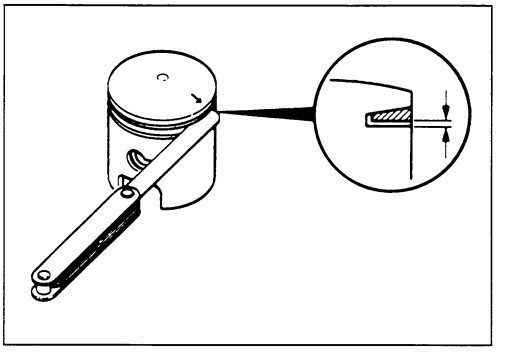

TOOL 09900-20803: Thickness gauge

Standard
Piston ring-to-groove clearance:
0.020–0.060 mm (0.0008–0.0024 in)

PISTON RING FREE END GAP AND PISTON RING END GAP

Measure the piston ring free end gap using vernier calipers. Next, fit the piston ring squarely into the cylinder and measure the piston ring end gap with the thickness gauge.
If any of the measurements exceed the service limit, replace the piston ring with a new one.

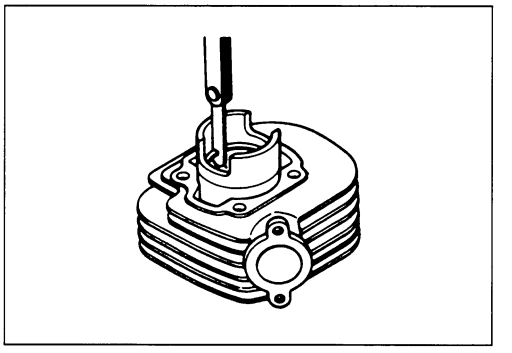

TOOL 09900-20101: Vernier calipers
09900-20803: Thickness gauge

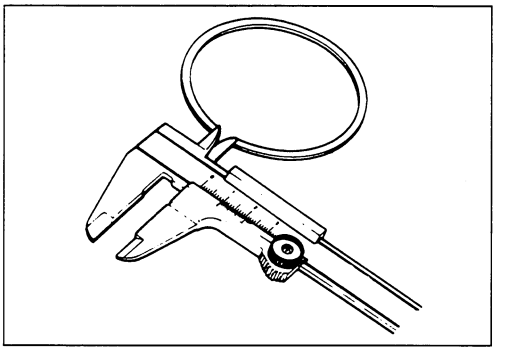

Service Limit:
Piston ring free end gap: 5.1 mm (0.20 in)

Service Limit:
Piston ring end gap: 0.85 mm (0.033 in)

CLUTCH

DRIVE AND DRIVEN PLATES

Measure the drive plate thickness and claw width with the vernier calipers. Also, measure the driven plate distortion with the thickness gauge as shown.

TOOL 09900-20102: Vernier calipers
09900-20803: Thickness gauge

Service limit
Drive plate thickness: 2.4 mm (0.094 in)
Drive plate claw width: 15.3 mm (0.60 in)
Driven plate distortion: 0.10 mm (0.004 in)

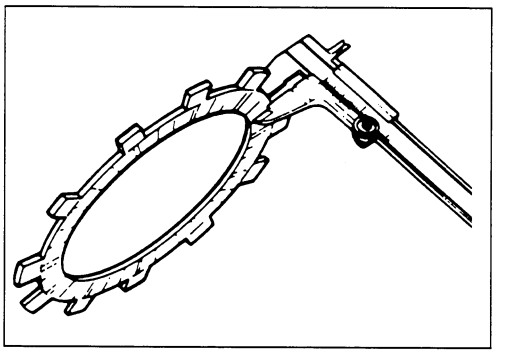

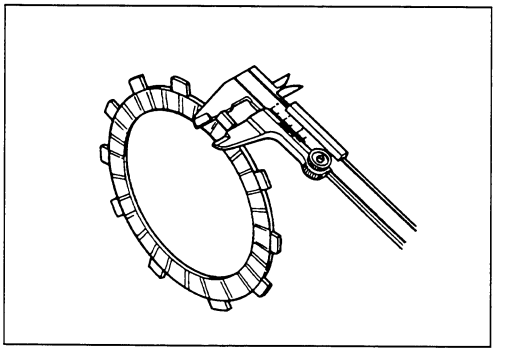

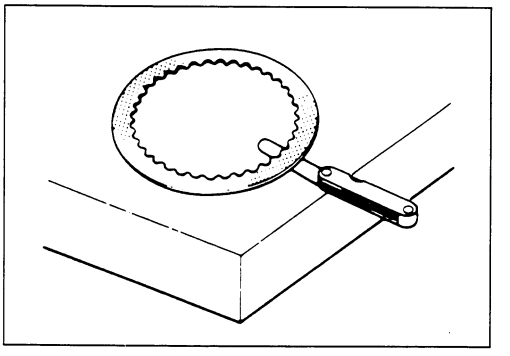

CLUTCH SPRING FREE LENGTH

Measure the free length of each clutch spring using vernier calipers. If any spring is not within the service limit, replace all of the springs.

Service Limit
Clutch spring free length: 45.5 mm (1.79 in)

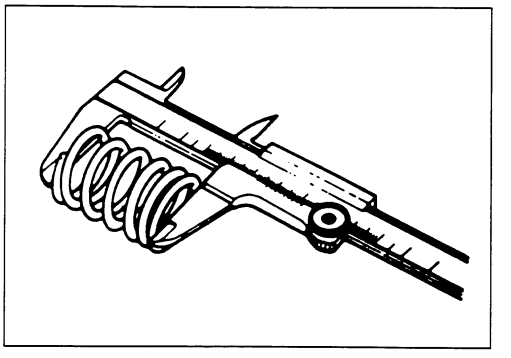

CLUTCH RELEASE BEARING

Inspect the clutch release bearing for any abnormality, especially cracks. When removing the bearing from the clutch, decide whether it can be reused or if it should be replaced. Smooth engagement and disengagement of the clutch depends on the condition of this bearing.

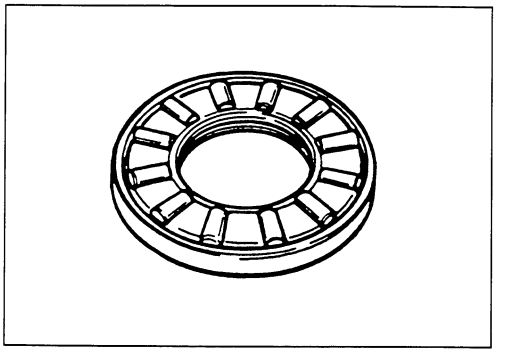

GEARSHIFT FORK

GEARSHIFT FORK-TO GEARSHIFT-FORK-GROOVE CLEARANCE

Measure the gearshift fork clearance in the groove of its respective gear using the thickness gauge.
If the clearance exceeds the specification, replace the fork, its respective gear or both.
The clearance for each of the three gearshift forks plays an important role in the smoothness and positiveness of the shifting action.

TOOL 09900-20803: Thickness gauge
09900-20102: Vernier calipers

Standard
Gearshift fork-to-gearshift-fork-groove clearance: 0.10–0.30 mm (0.004–0.012 in)
Service Limit: 0.5 mm (0.02 in)

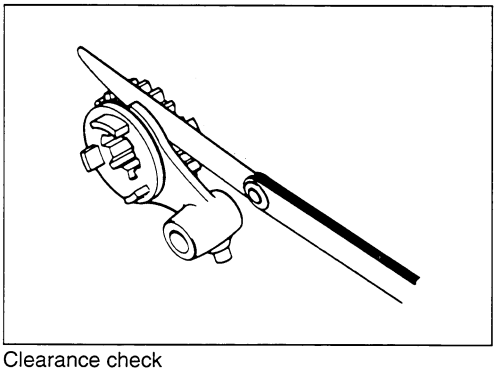
Clearance check

Standard
Gearshift fork groove width: 4.8–4.9 mm (0.189–0.193 in)

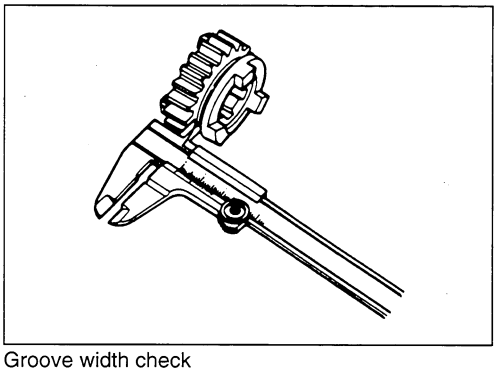
Groove width check

Standard
Gearshift fork thickness: 4.6–4.7 mm (0.181–0.185 in)

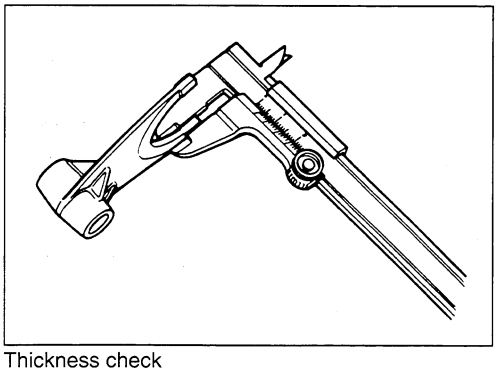
Thickness check

CONROD

CONROD SMALL END I.D.

Measure the conrod small end inside diameter using the dial calipers.

TOOL 09900-20605: Dial calipers

Service limit
Conrod small end I.D.: 23.040 mm (0.9071 in)

If the conrod small end inside diameter exceeds the service limit, replace the conrod.

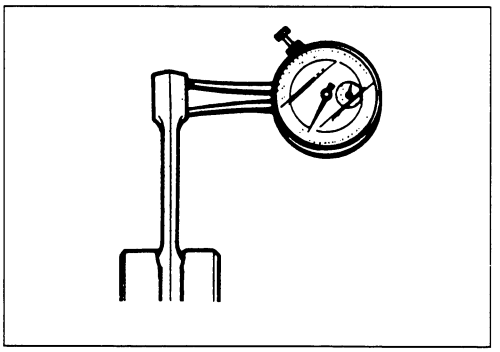

CONROD NEEDLE BEARING

Inspect the needle bearing for wear or damage. If any wear or damage is found, replace the needle bearing with a new one.

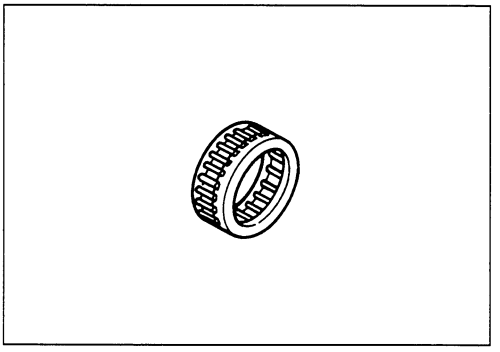

CRANKSHAFT

CRANKSHAFT-WEB-TO-CRANKSHAFT-WEB WIDTH

Measure the crankshaft-web-to-crankshaft-web width. Adjust or replace the part(s) that is out of specification.

TOOL 09900-20102: Vernier calipers

Standard
Crankshaft-web-to-crankshaft-web width:
57.0–59.0 mm (2.279–2.287 in)

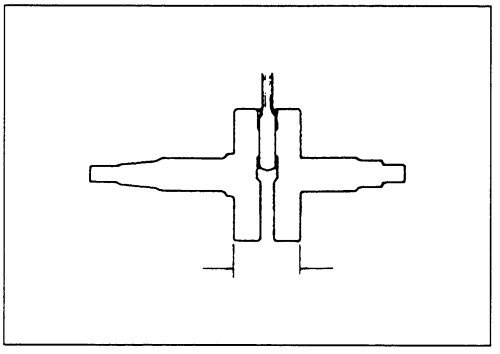

CRANKSHAFT RUNOUT

Support the crankshaft with "V" blocks. Measure the runout with a dial gauge.
Excessive crankshaft runout is often responsible for abnormal engine vibration which will shorten the life of the engine. Adjust or replace the part(s) that is out of specification.

TOOL 09900-20606: Dial gauge (1/100 mm, 10 mm)
09900-20701: Magnetic stand
09910-21304: V-block (100 mm)

Service limit
Crankshaft runout: 0.05 mm (0.002 in)

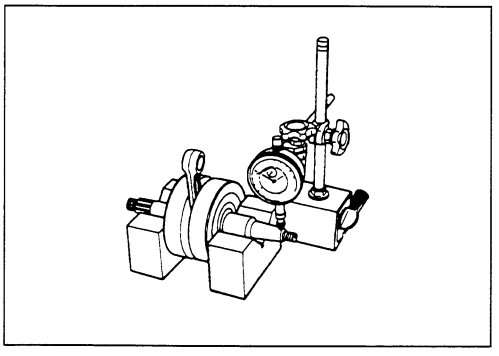

ENGINE REASSEMBLY

Reassemble the engine in the reverse order of disassembly. The following steps require special attention or precautionary measures should be taken.

NOTE:
Apply engine oil to each running and sliding part before reassembling.

- Install the countershaft bearing retainer.

NOTE:
Apply a small quantity of THREAD LOCK SUPER "1322" to the bearing retainer screws ①.

Bearing retainer screws: 8 N·m (0.8 kg-m, 6 lb-ft)
99000-32110: THREAD LOCK SUPER "1322"

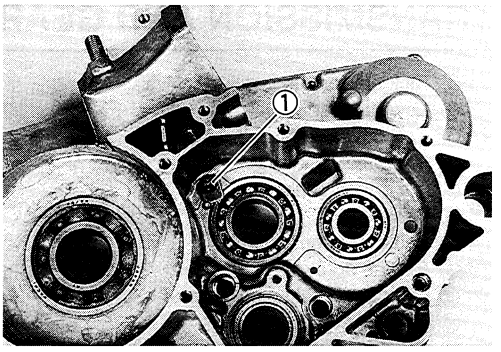

CRANKSHAFT

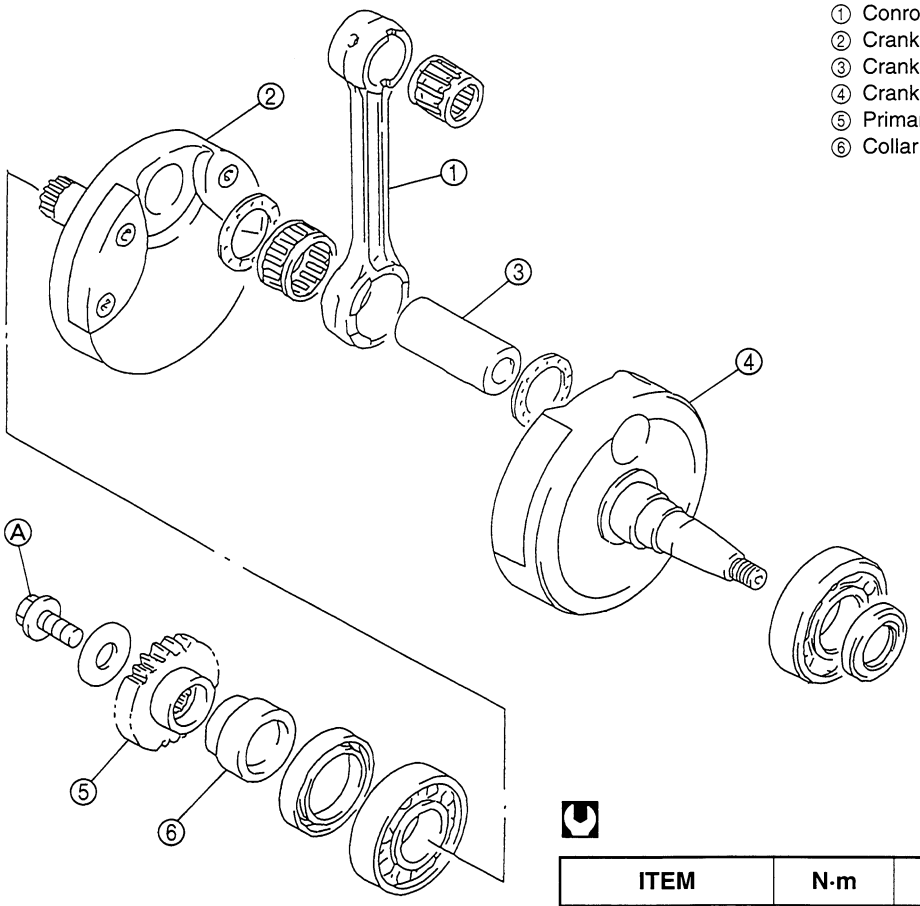

① Conrod
② Crankshaft (R)
③ Crank pin
④ Crankshaft (L)
⑤ Primary drive gear
⑥ Collar

ITEM	N·m	kg-m	lb-ft
Ⓐ	90	9.0	65.0

- Install the crankshaft ① into the left crankcase using the special tools.

TOOL 09910-32812: Crankshaft installer
09911-11310: Attachment
09910-20116: Conrod holder

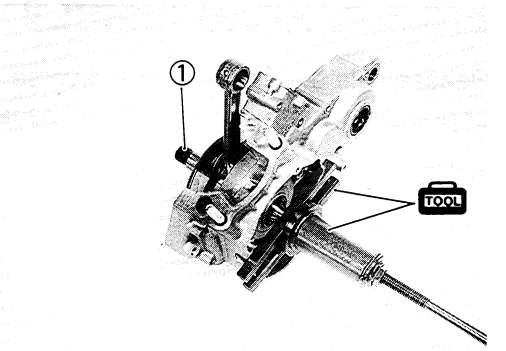

TRANSMISSION AND GEARSHIFT FORKS

① Kick starter idle gear
② Low driven gear
③ Top driven gear
④ 3rd driven gear
⑤ 4th driven gear
⑥ Drive shaft
⑦ 2nd driven gear
⑧ Engine sproket
⑨ Countershaft/low drive gear
⑩ Top drive gear
⑪ 3rd drive gear
⑫ 4th drive gear
⑬ 2nd drive gear

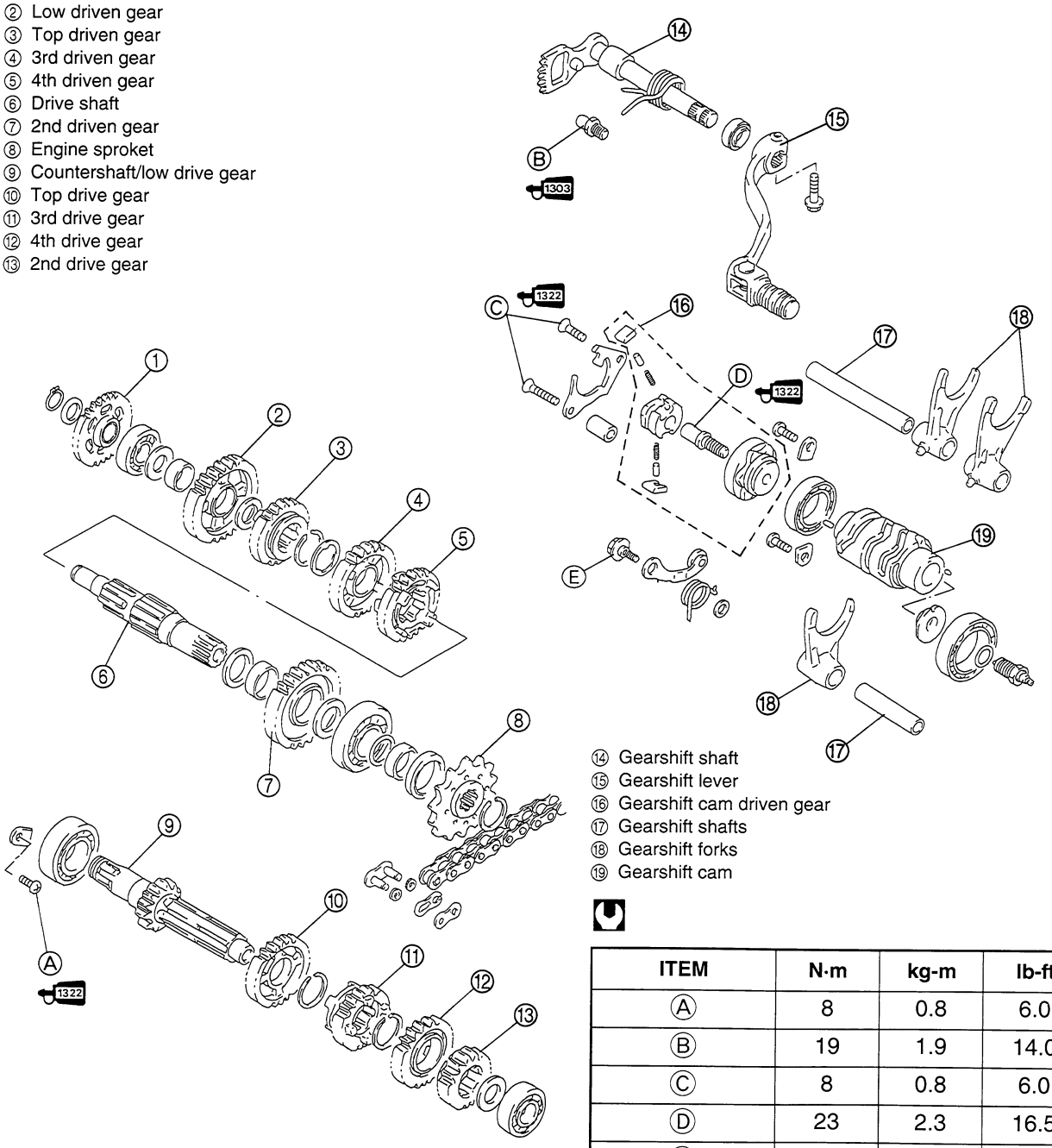

⑭ Gearshift shaft
⑮ Gearshift lever
⑯ Gearshift cam driven gear
⑰ Gearshift shafts
⑱ Gearshift forks
⑲ Gearshift cam

ITEM	N·m	kg-m	lb-ft
Ⓐ	8	0.8	6.0
Ⓑ	19	1.9	14.0
Ⓒ	8	0.8	6.0
Ⓓ	23	2.3	16.5
Ⓔ	10	1.0	7.0

Assemble the countershaft and driveshaft in the reverse order of disassembly. Pay attention to the following points:

NOTE

* *Before installing the gears, rotate the bearings by hand to inspect for abnormal noises and smooth rotation. Replace the bearing if there is anything unusual.*
* *Before installing the gears, lightly coat the driveshaft and countershaft with moly paste or engine oil (engine oil).*
* *Before installing the oil seal, apply grease to the oil seal lip.*

99000-25140: SUZUKI MOLY PASTE

99000-25010: SUZUKI SUPER GREASE "A"

CAUTION

* **Never reuse a circlip.**
* **When installing a new circlip, do not expand the end gap larger than required to slip the circlip over the shaft.**
* **After installing a circlip, make sure it is completely seated in its groove and securely fitted.**

NOTE:

When reassembling the transmission, attention must be given to the locations and positions of the washers and circlips. The cross-sectional view shows the correct position of the gears, washers, and circlips. (See p. 3-27.)

- Fit the circlip to the side where the thrust is, as shown in the illustration. The rounded side should be against the gear surface.

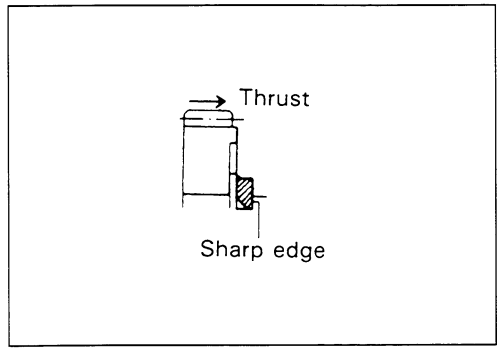

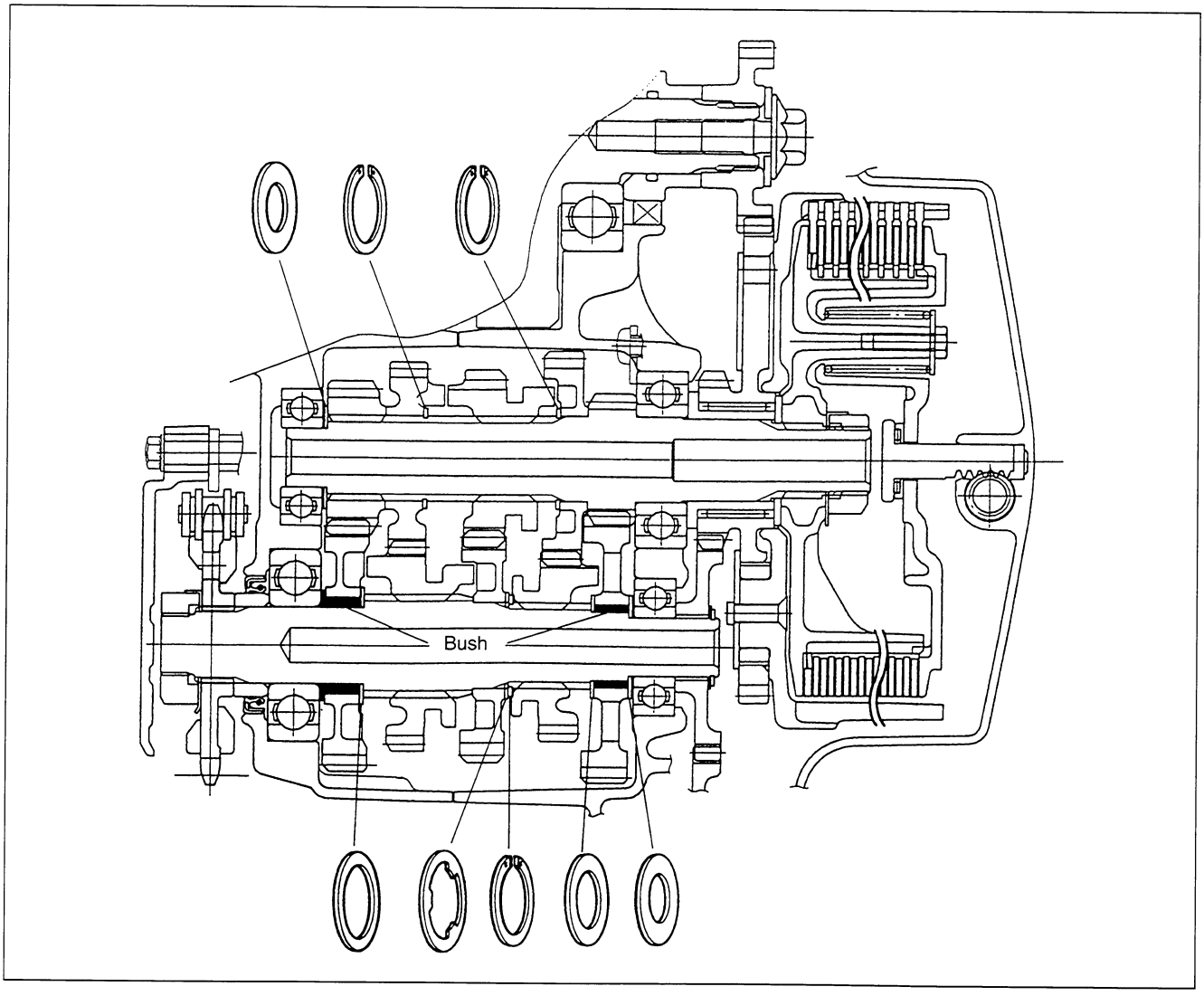

- Install the countershaft ① and driveshaft ② into the left crankcase.

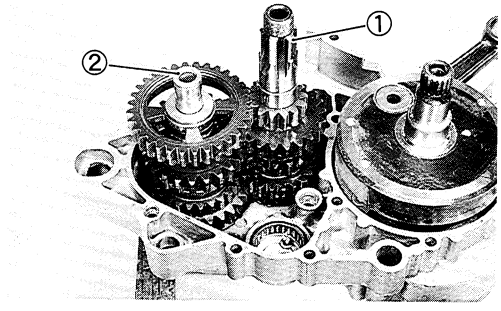

- Install the gearshift forks to their respective gears.

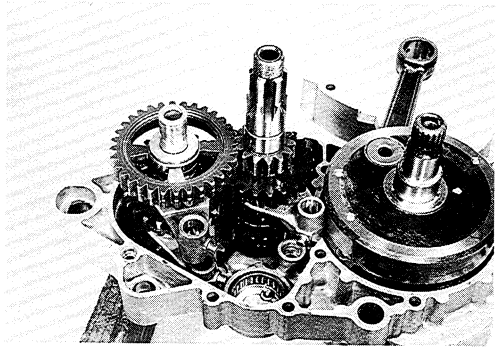

- Install the gearshift cam ① into the crankcase.

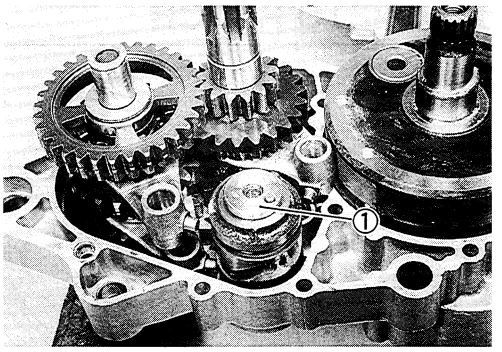

- Install the gearshift fork shafts ②.

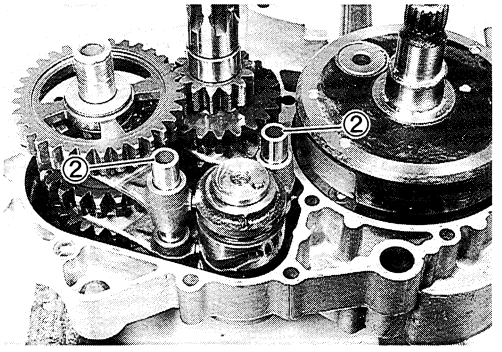

CRANKCASE

- Clean the mating surfaces of the crankcases.
- Install the dowel pins into the left crankcase.
- Apply engine oil to the conrod big end of the crankshaft and to the transmission gears.

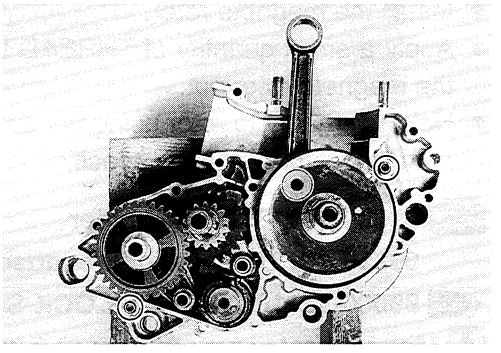

- Install the left crankcase bolts. Tighten the bolts a little at a time diagonally. Then, torque them to specification.

Crankcase bolt: 11 N·m (1.1 kg-m, 8.0 lb-ft)

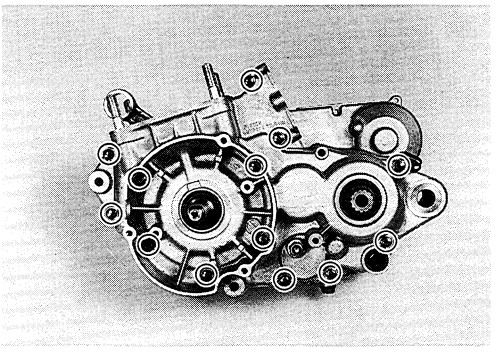

MAGNETO ROTOR

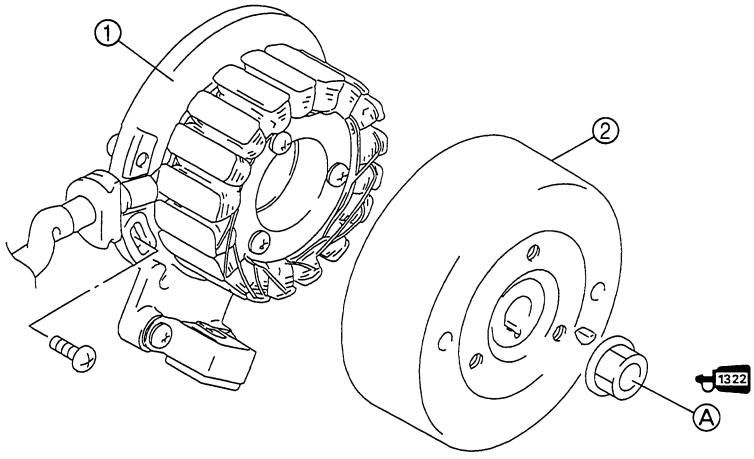

① Stator coil
② Magneto rotor

ITEM	N·m	kg-m	lb-ft
Ⓐ	78	7.8	56.5

- Install the magneto rotor.
- Apply a small quantity of THREAD LOCK SUPER "1322" to the magneto rotor nut.
- Hold the magneto rotor using the special tool and tighten the magneto rotor nut to the specified torque.

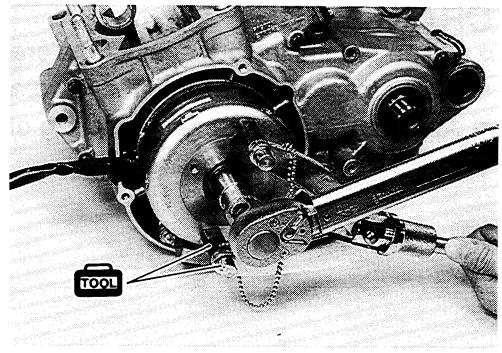

TOOL 09330-40113: Rotor holder
09930-40131: Rotor holder attachment
1303 99000-32110: THREAD LOCK SUPER "1322"
Magneto rotor nut: 80 N·m (8.0 kg-m, 58.0 lb-ft)

GEARSHIFT SHAFT

- Apply THREAD LOCK SUPER "1322" to the gearshift cam driven gear pin and tighten it to the specified torque.

99000-32110: THREAD LOCK SUPER "1322"

Gearshift cam driven gear pin: 23 N·m (2.3 kg-m, 16.5 lb-ft)

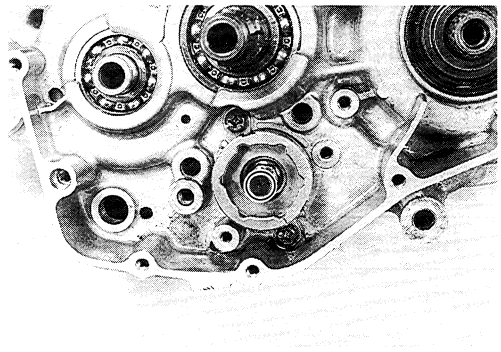

- Tighten the gearshift cam stopper bolt to the specified torque.

Gearshift cam stopper bolt: 10 N·m (1.0 kg-m, 7 lb-ft)

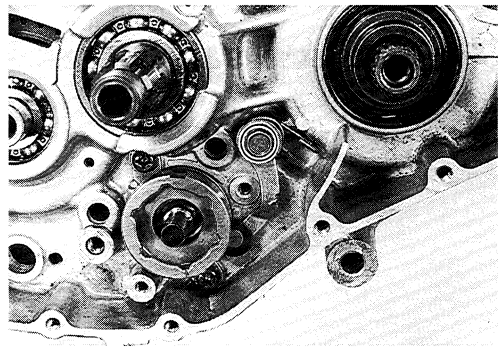

- Install each pawl into the gearshift cam driven gear. The large shoulder Ⓐ must face to the outside.
- Install the gearshift cam driven gear.

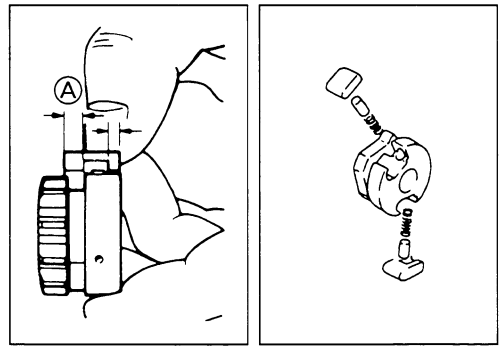

- Install the pawl lifter ①.
- Apply a small quantity of THREAD LOCK SUPER "1322" to the screws and tighten them to the specified torque.

99000-32110: THREAD LOCK SUPER "1322"

Pawl lifter screws: 8 N·m (0.8 kg-m, 6.0 lb-ft)

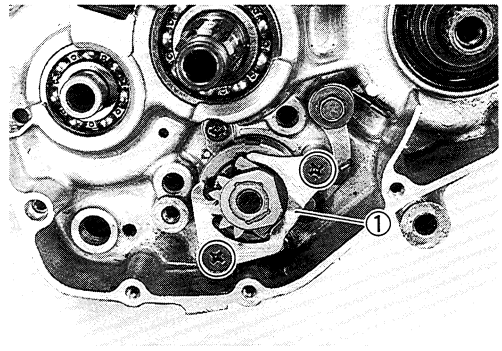

- Apply a small quantity of "THREAD LOCK SUPER "1303" to the gearshift shaft stopper and tighten it to the specified torque.

99000-32030: THREAD LOCK SUPER "1303"

Gearshift shaft stopper: 19 N·m (1.9 kg-m, 13 lb-ft)

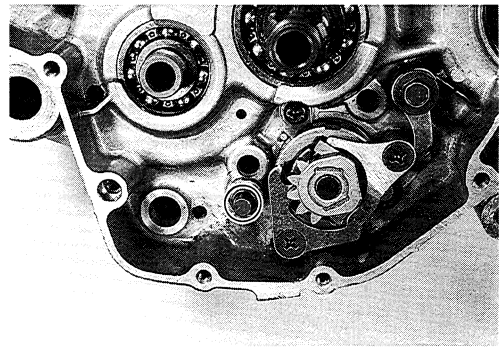

- Install the gearshift shaft return spring.
- Install the gearshift shaft.
- Apply a small amount of SUZUKI SUPER GREASE "A" to the oil seal lip of the gearshift shaft.

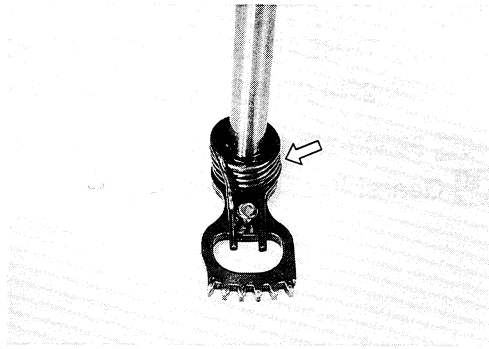

⚠ CAUTION

Replace the gearshift shaft oil seal with a new one.

NOTE:
Align the center teeth Ⓐ on the gearshift shaft with the center teeth Ⓑ on the gearshift cam driven gear.

99000-25010: SUZUKI SUPER GREASE "A"

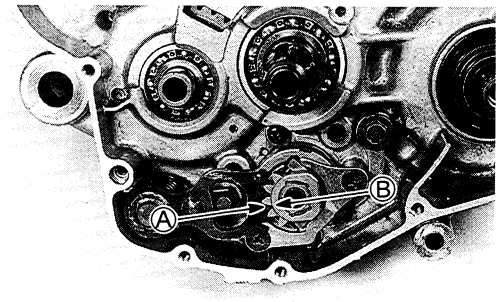

- Hold the magneto rotor using the special tools and tighten the primary drive gear bolt to the specified torque.

TOOL 09930-40113: Rotor holder
09930-40131: Rotor holder attachment
Primary drive gear bolt: 90 N·m (9.0 kg-m, 65.0 lb-ft)

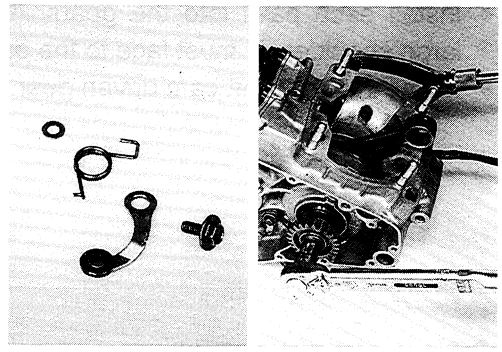

- Install the magneto rotor cover.

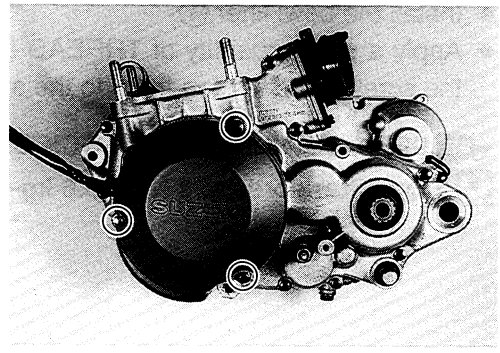

KICK STARTER

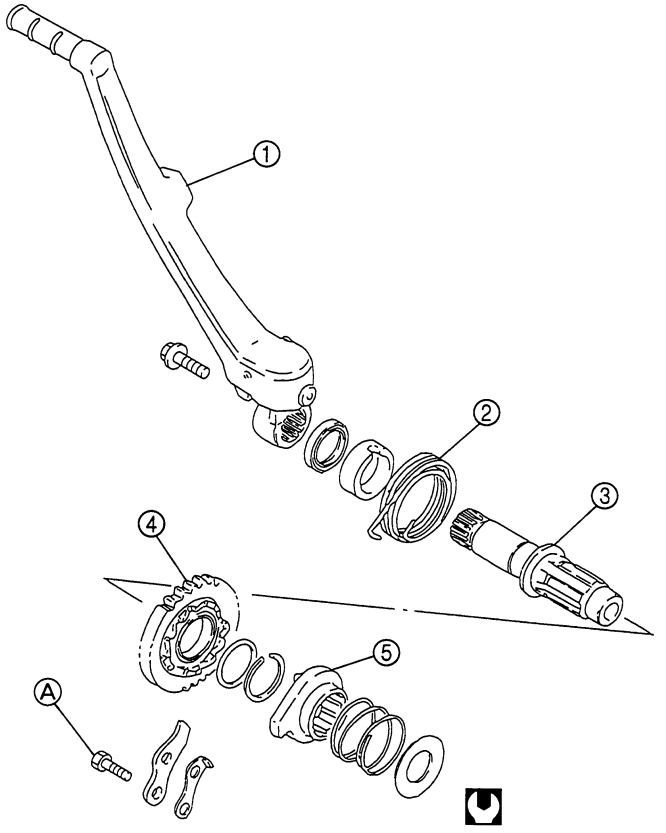

① Kick crank
② Spring
③ Kick starter shaft
④ Kick starter drive gear
⑤ Guide

ITEM	N·m	kg-m	lb-ft
Ⓐ	10	1.0	7.0

- Install the kick starter plate and stopper.
- Apply a small quantity of THREAD LOCK SUPER "1322" to the bolts and tighten them to the specified torque.

99000-32110: THREAD LOCK SUPER "1322"

Kick starter stopper bolts: 10 N·m (1.0 kg-m, 7 lb-ft)

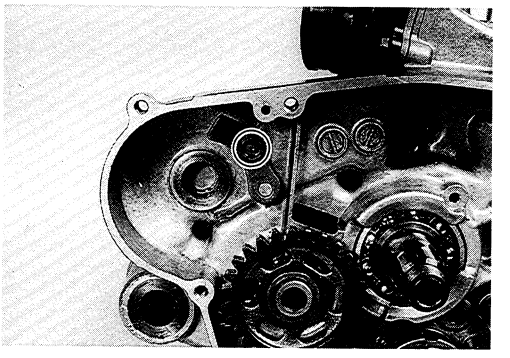

- When installing the kick starter drive gear onto the kick starter shaft, align the punch mark Ⓐ in the kick starter guide with the punch mark Ⓑ in the kick starter shaft.

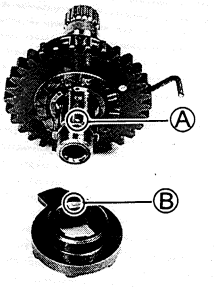

- Install the kick starter shaft and hook the end ① of the spring onto the crankcase boss ②.

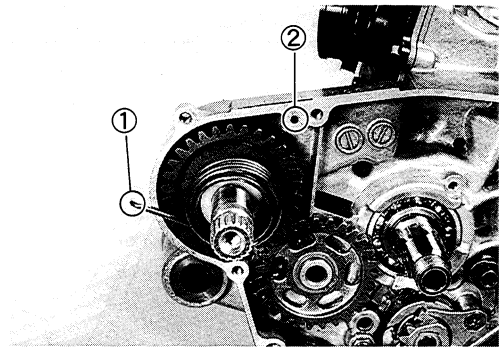

- Install the exhaust valve actuator assembly.

⚠ CAUTION

The screws ① must be replaced with new ones.

- Install the exhaust valve governor.

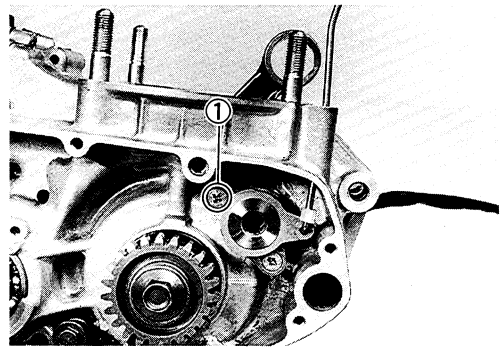

CLUTCH

① Clutch pressure plate
② Clutch driven plate
③ Clutch drive plate
④ Washer
⑤ Clutch sleeve hub
⑥ Clutch housing

ITEM	N·m	kg-m	lb-ft
Ⓐ	90	9.0	65.0

- Install the collar, bearing, clutch housing, and thrust washer.

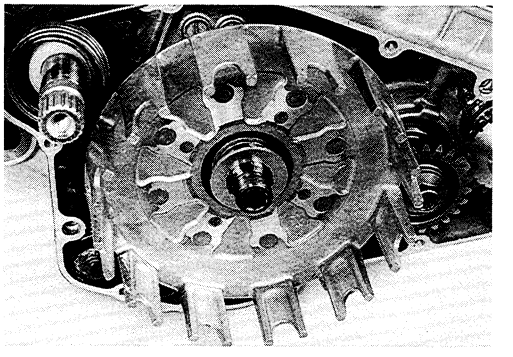

- Install the clutch sleeve hub onto the countershaft.
- Hold the clutch sleeve hub using the special tool and tighten the clutch sleeve hub nut to the specified torque.

TOOL 09920-53740: Clutch sleeve hub holder

Clutch sleeve hub nut: 90 N·m (9.0 kg-m, 65.0 lb-ft)

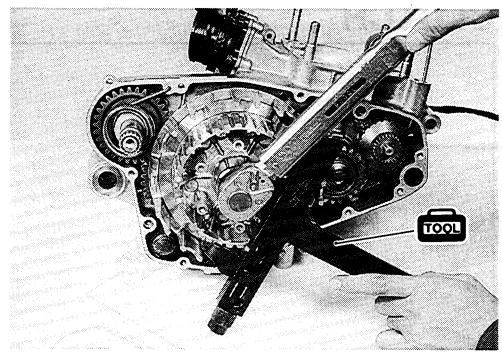

- Lock the nut by firmly bending the tongue of the washer.

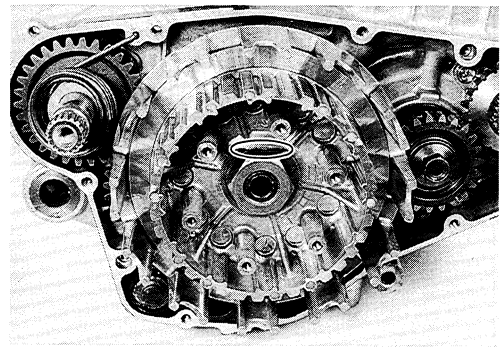

- Install the clutch pressure plate.
- Install the springs, washers, and tighten the clutch pressure plate bolts diagonally.

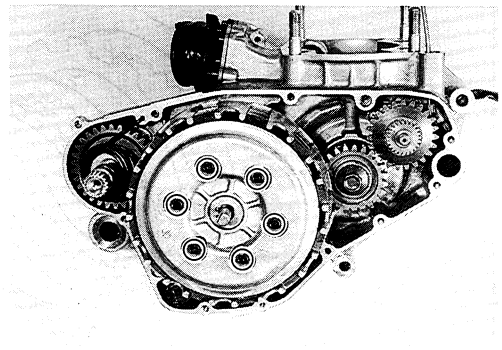

- Install the clutch cover.
- Tighten the bolts diagonally.

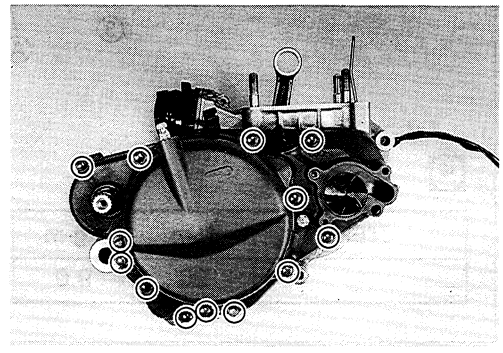

PISTON, CYLINDER, CYLINDER HEAD, AND EXHAUST VALVE ASSEMBLY

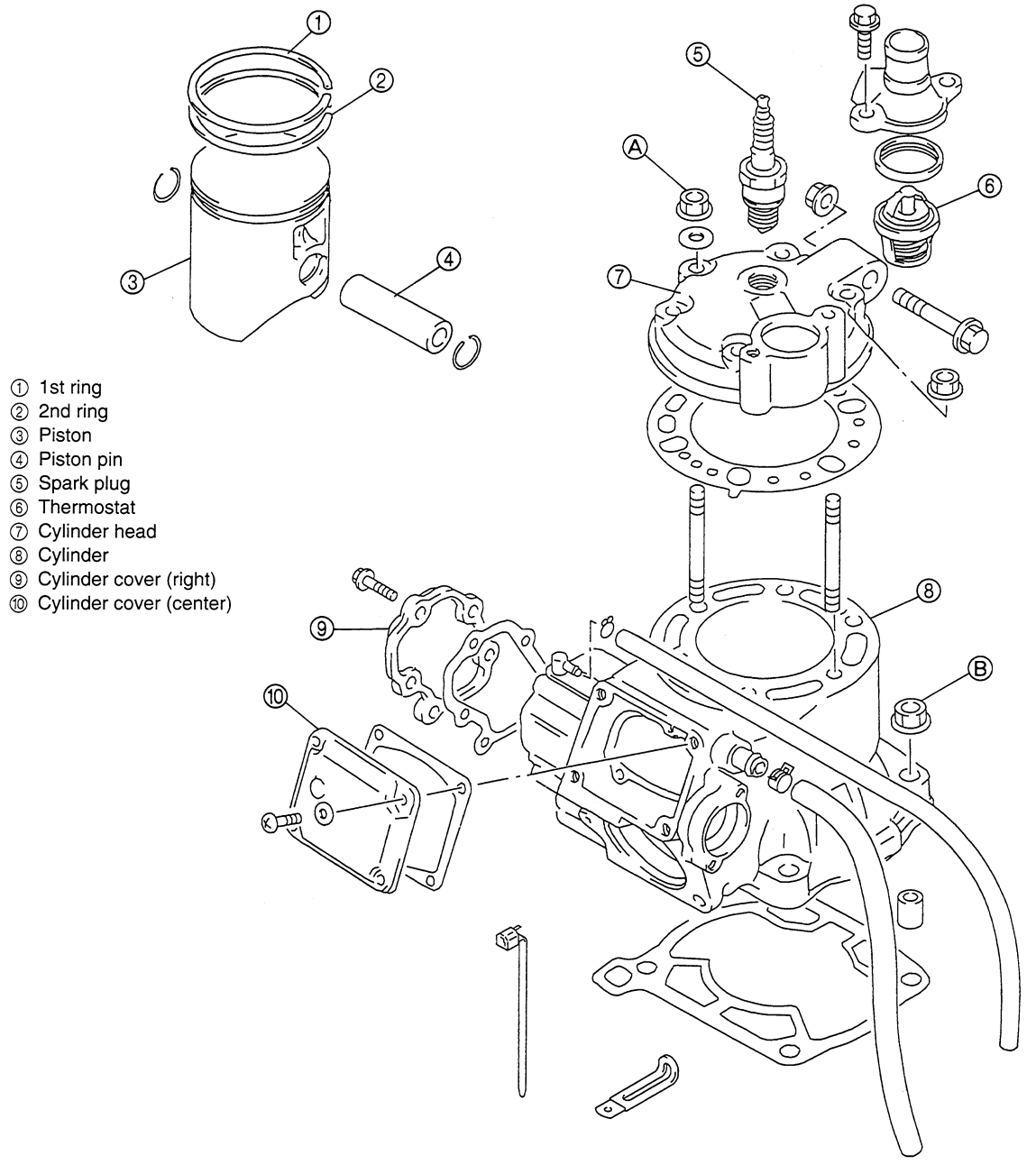

ITEM	N·m	kg-m	lb-ft
Ⓐ	28	2.8	20.0
Ⓑ	38	3.8	27.5

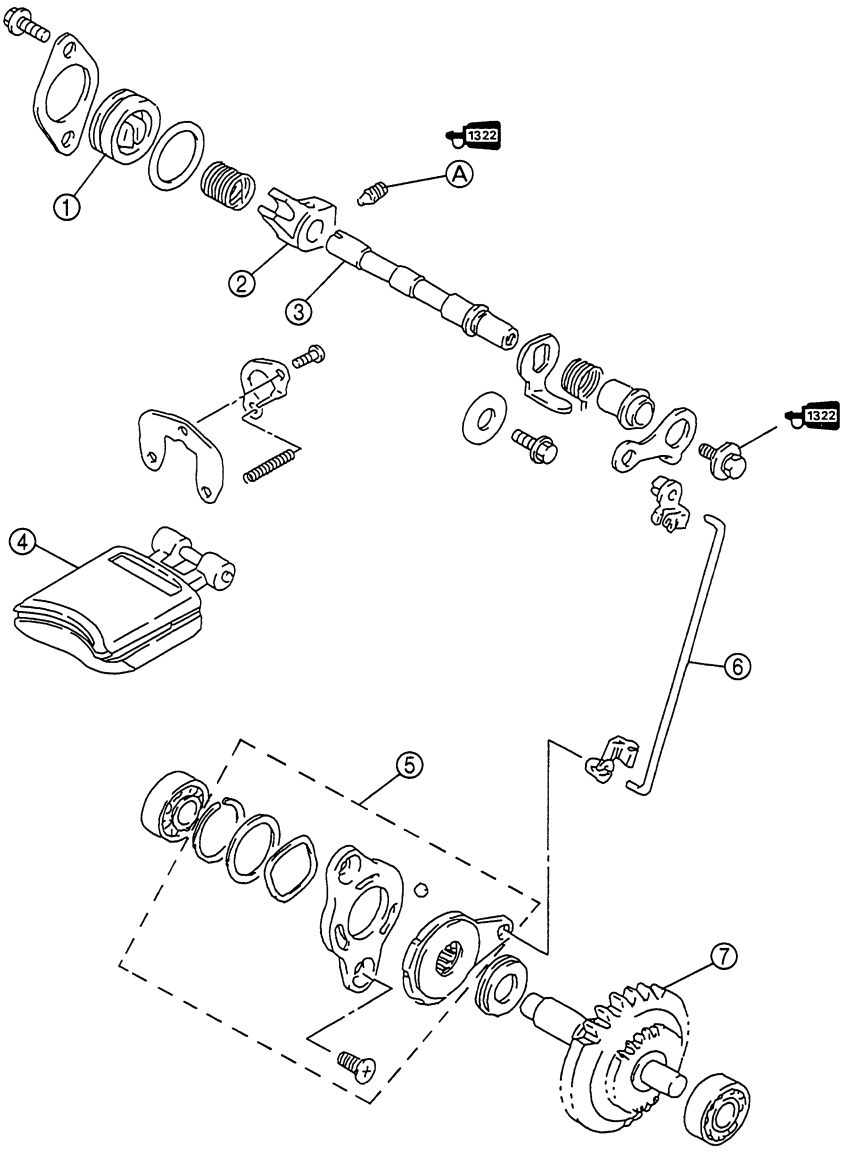

① Exhaust valve cap
② Exhaust valve arm
③ Exhaust valve shaft
④ Exhaust valve
⑤ Exhaust valve actuator assembly
⑥ Exhaust valve rod
⑦ Exhaust valve governor

ITEM	N·m	kg-m	lb-ft
Ⓐ	10	1.0	7.0

- Install each piston ring with its "R" mark facing up.

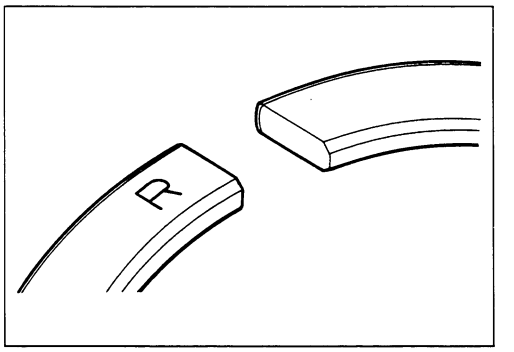

- Install the piston onto the connecting rod. Oil the piston pin and slide it into the piston pin hole and the connecting rod.

NOTE:
The arrow mark ① on the piston crown must point towards the exhaust side.

- Cover the opening of the crankcase with a rag. Install the new piston pin circlip into the piston.

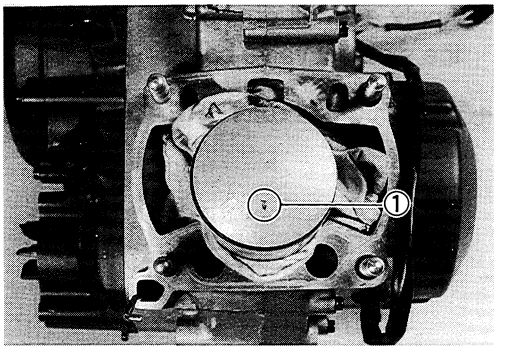

⚠ CAUTION

Use a new gasket to prevent oil leakage.

- Install the exhaust valve.

⚠ CAUTION

Install the exhaust valve with the notched side facing up.

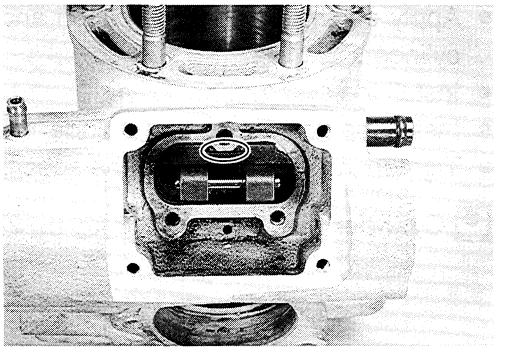

- Install the exhaust valve shaft and arm.
- Apply a small quantity of THREAD LOCK SUPER "1322" to the screw ① and tighten it to the specified torque.

1322 99000-32110: THREAD LOCK SUPER "1322"

Exhaust valve shaft stopper screw ①:
10 N·m (1.0 kg-m, 7 lb-ft)

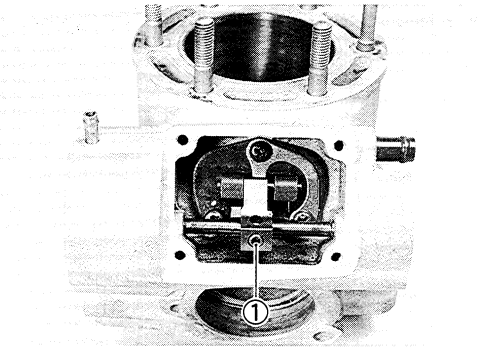

- Align the slot in the exhaust valve cap with the notch in the exhaust valve shaft and install the assembly.
- Turn the exhaust valve cap 180° and install the bolts.

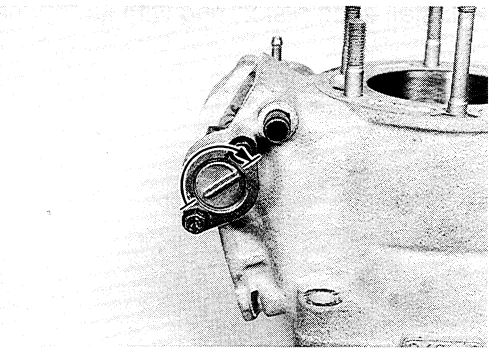

- Apply a small quantity of THREAD LOCK SUPER"1322" to the exhaust valve bolt.

1322 99000-32110: THREAD LOCK SUPER "1322"

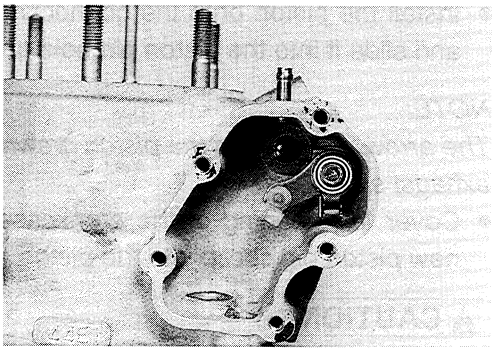

- Install the center cylinder cover.

NOTE:
Install the gasket and the center cylinder cover bolt Ⓐ as shown.

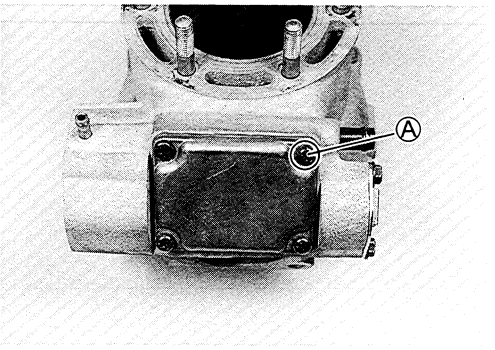

- Apply engine oil onto the piston and the inside walls of the cylinder.
- Install the cylinder.
- Install the dowel pins and cylinder head gasket.
- Tighten the cylinder nut to the specified torque.

Cylinder nut: 38 N·m (3.8 kg-m, 27.5 lb-ft)

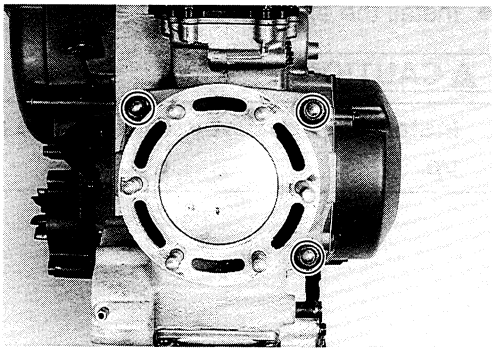

- Install the right side cylinder cover.

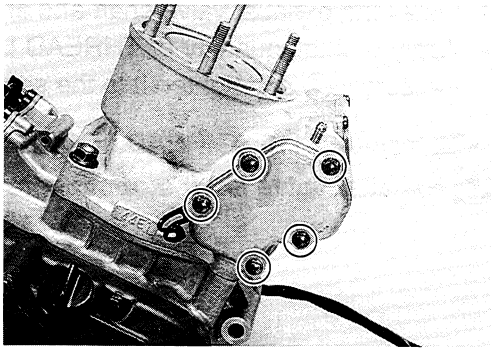

- Install the cylinder head gasket.

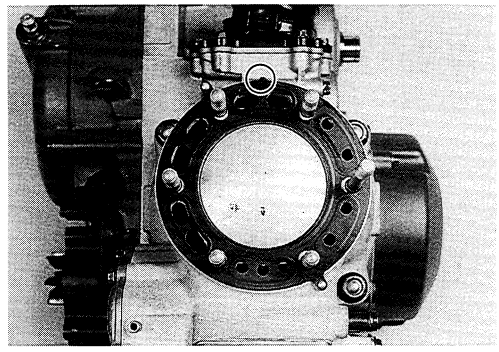

⚠ CAUTION

Face the projection towards the inlet.

- Tighten the cylinder head nut to the specified torque.

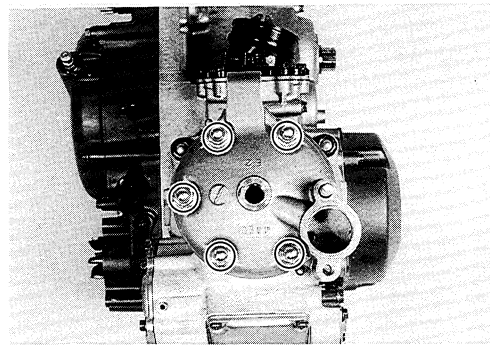

Cylinder head nut: 28 N·m (2.8 kg-m, 20.0 lb-ft)

FUEL AND LUBRICATION SYSTEM

CONTENTS

FUEL VALVE 4- 1
FUEL VALVE MECHANISM 4- 1
FUEL FILTER INSPECTION AND CLEANING 4- 2
FUEL TANK AND OIL TANK 4- 2
REMOVAL 4- 2
CARBURETOR 4- 3
SPECIFICATIONS 4- 3
CARBURETOR I.D. No. 4- 4
REMOVAL 4- 4
DISASSEMBLY 4- 4
INSPECTION 4- 5
NEEDLE VALVE INSPECTION 4- 6
FLOAT HEIGHT ADJUSTMENT 4- 6
REASSEMBLY AND REMOUNTING 4- 6

FUEL VALVE

FUEL VALVE MECHANISM

The fuel valve has a lever that can be set to three positions: "ON", "OFF", and "RES".
When the lever is turned to the "ON" position, the main passage is opened. When the lever is turned to the "OFF" position, both passages are closed.

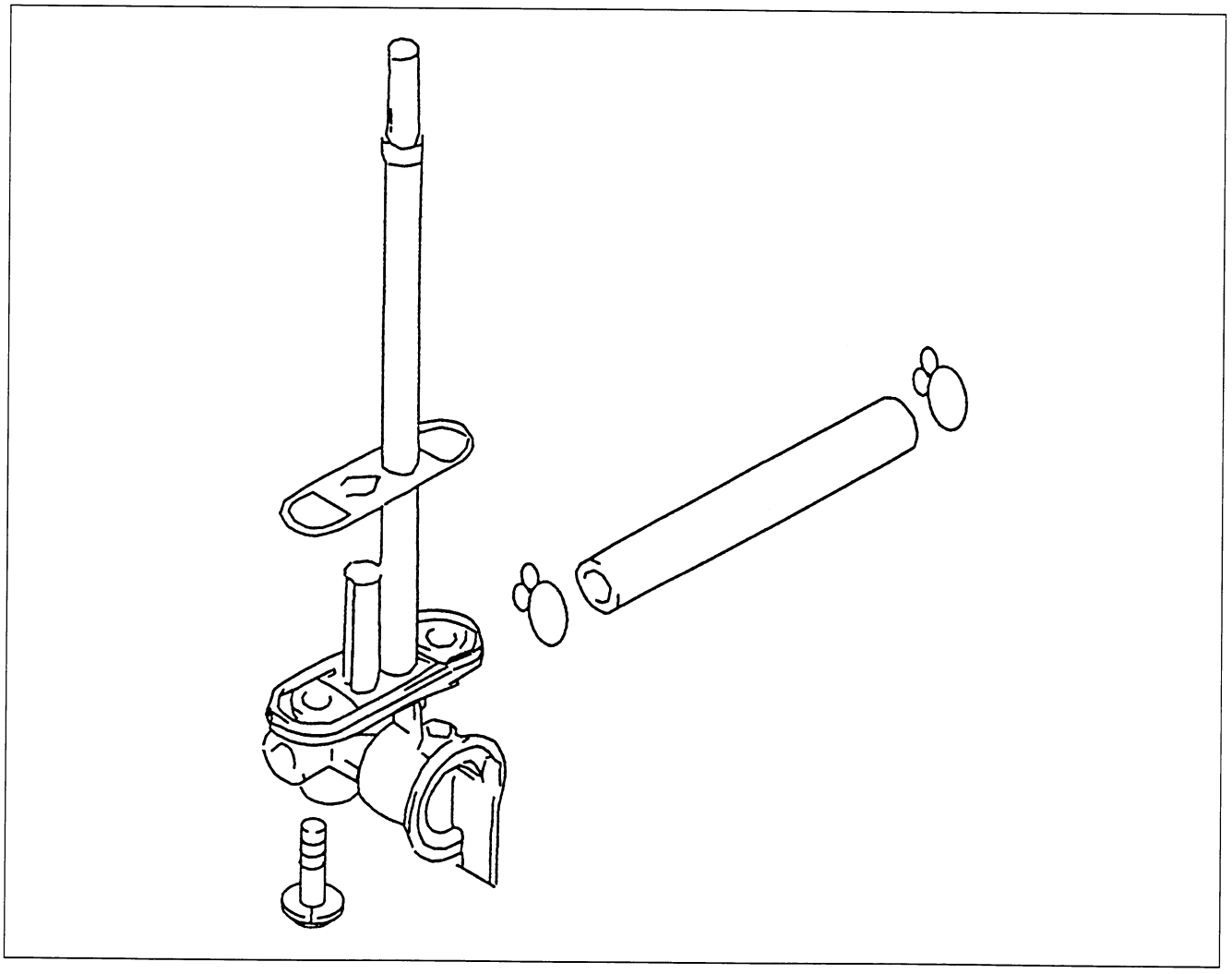

- Turn the fuel valve lever to the "OFF" position and disconnect the fuel hose from the fuel valve.
- Place a clean oil pan under the fuel valve, turn the lever to the "RES" position and drain the fuel.
- Remove the fuel valve securing screws.
- Remove the fuel valve.

⚠ WARNING

Gasoline is highly flammable and explosive.
Keep heat, sparks and flames away from gasoline.

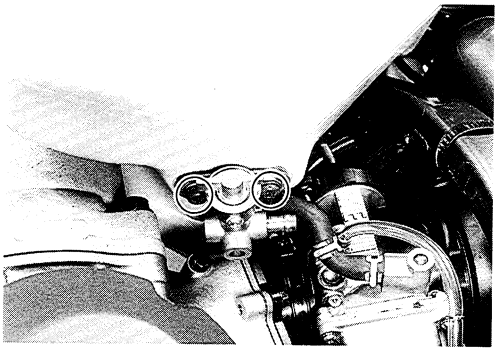

FUEL FILTER INSPECTION AND CLEANING

- Remove the fuel valve. (See p. 4-1.)

If the fuel filter is dirty with sediment or rust, fuel will not flow smoothly and a loss in engine power may result. Clean the fuel filter using compressed air. Also, check the fuel filter for cracks.

⚠ WARNING

- **Gasoline is very explosive. Extreme care must be taken.**
- **Gaskets and O-rings must be replaced with new ones to prevent fuel leakage.**

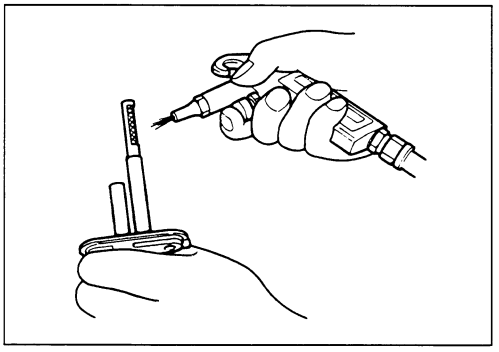

FUEL TANK

REMOVAL

⚠ WARNING

Gasoline is very explosive.
Extreme care must be taken.

- Remove the seat and radiator covers. (See p. 6-2.)

- Turn the fuel valve lever to "OFF" and disconnect the fuel hose ①.

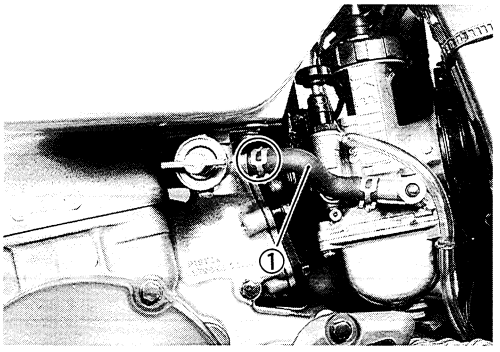

- Remove the fuel tank by removing the mounting bolts and unhook the fuel tank band.

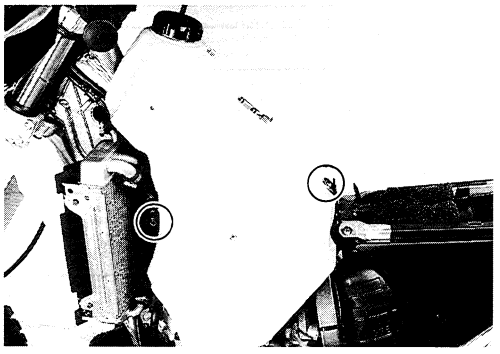

CARBURETOR

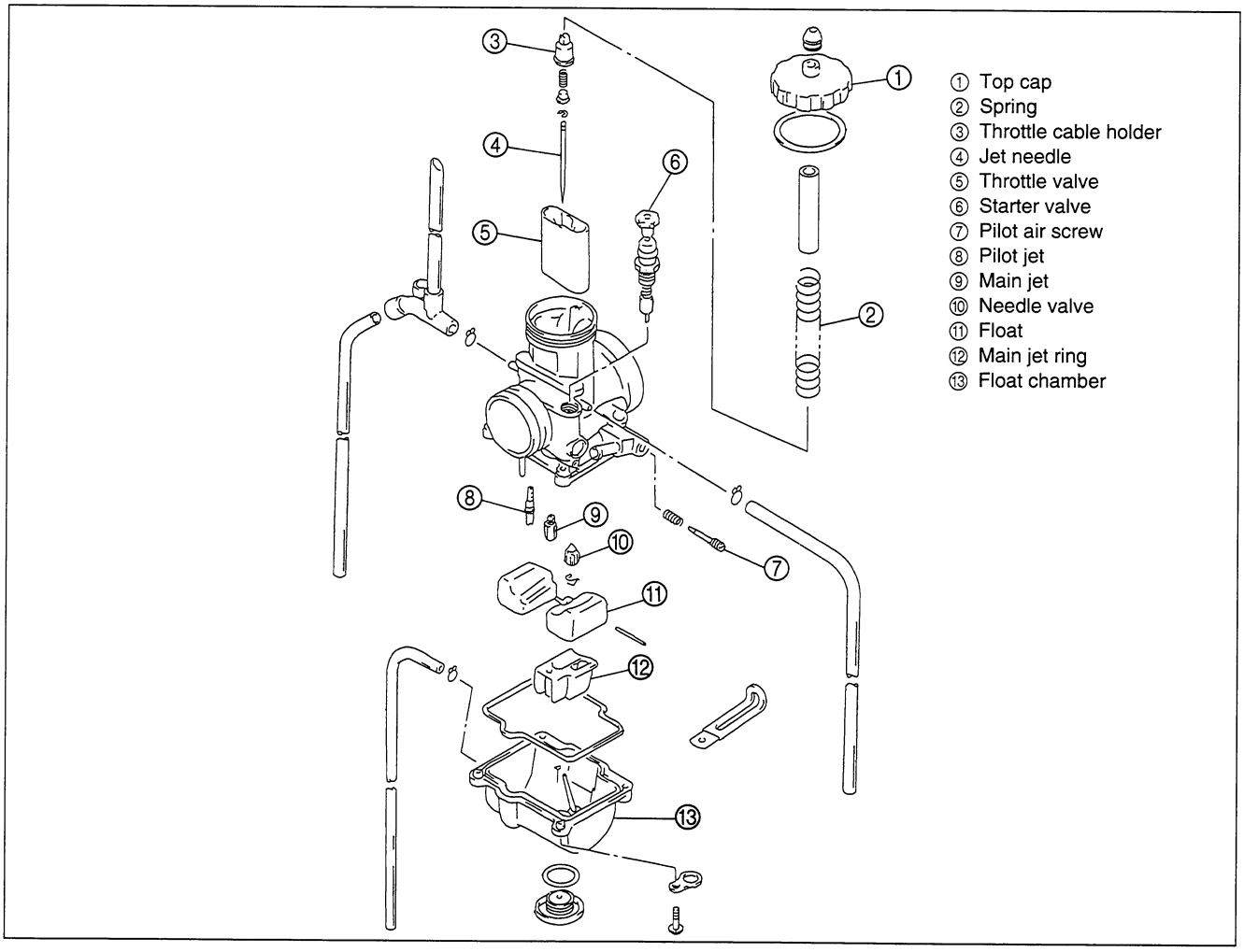

SPECIFICATIONS

mm (in)

ITEM		SPECIFICATION
Carburetor type		KEIHIN PJ38
Bore size		38
I.D. No.		44E2
Idle r/min		1150–1250 r/min
Float height		16.0±1.0 (0.63±0.04)
Main jet	(M.J.)	#175
Main air jet	(M.A.J.)	#200
Jet needle	(J.N.)	R1472L1L-2nd
Cut-away	(C.A.)	#5
Pilot jet	(P.J.)	#55
Bypass	(B.P.)	0.8 (0.031)
Pilot outlet	(P.O.)	0.7 (0.028)
Air screw	(A.S.)	1 turn out
Throttle cable play		3.0–6.0 (0.12–0.24)

CARBURETOR I.D. No.

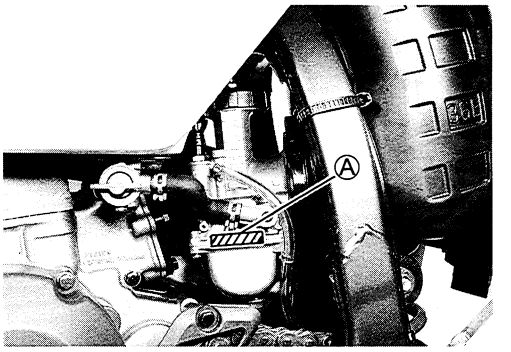

REMOVAL

- Turn the fuel valve lever to "OFF" and disconnect the fuel hose.
- Remove the fuel tank. (See p. 4-2.)
- Loosen the carburetor clamp screws.
- Remove the carburetor ①.

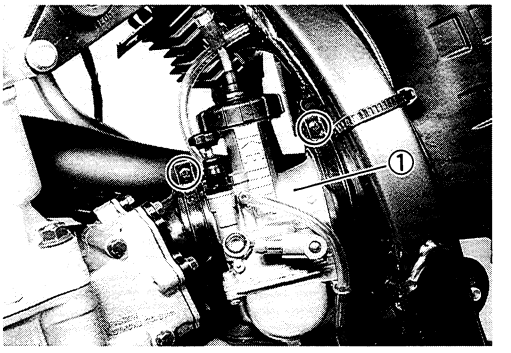

- Remove the top cap ② along with the throttle valve.

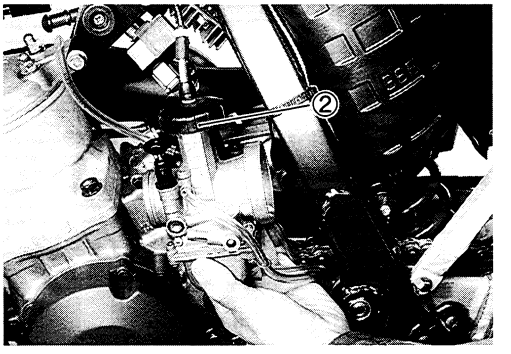

DISASSEMBLY

- Remove the throttle cable from the slit in the throttle valve and then remove the throttle valve ①, jet needle and throttle valve spring ②.

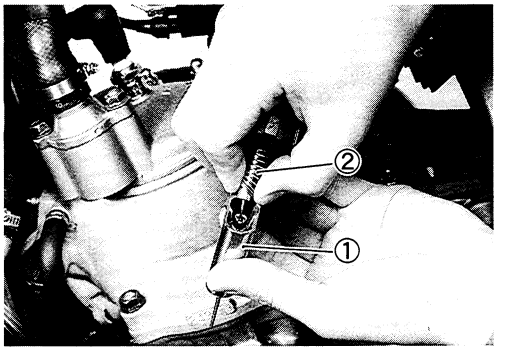

- Remove the throttle cable holder ③ and jet needle ④ from the throttle valve ⑤.

NOTE:
When removing the throttle cable holder, push and turn 90˚.

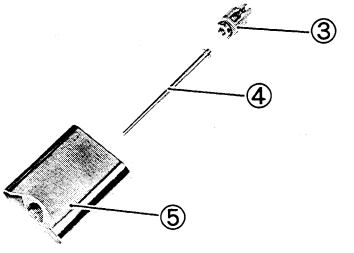

- Remove the float chamber ①.

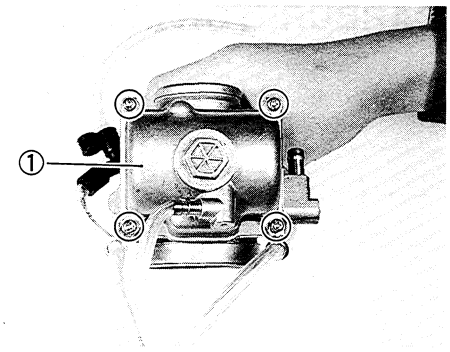

- Remove the main jet ring ②.
- Remove the float ③ and needle valve ④ by removing the float pin ⑤.

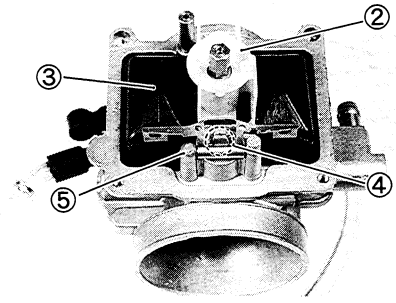

- Remove the main jet ⑥ and pilot jet ⑦.

⚠ CAUTION

Do not use a wire to clean the passages and jets. Only use compressed air.

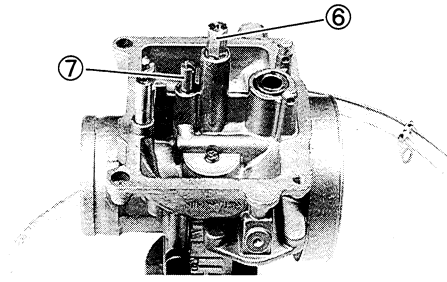

- Remove the starter valve ⑧ and pilot air screw ⑨.

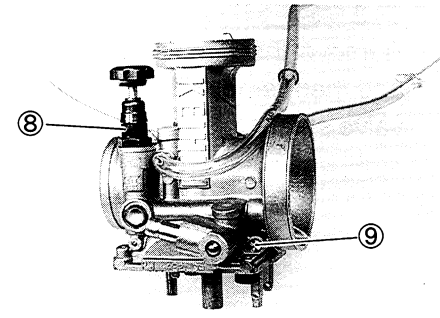

INSPECTION

Check the following items for any damage or clogs.

* Main jet
* Pilot jet
* Needle jet
* Starter valve
* Throttle valve
* Float
* Needle valve

NEEDLE VALVE INSPECTION

If foreign matter is caught between the valve seat and the needle valve, the gasoline will continue flowing and overflow. If the valve seat and needle valve are worn beyond the permissible limits, similar trouble will occur. Conversely, if the needle valve sticks, the gasoline will not flow into the float chamber. Clean the float chamber and float parts with gasoline. If the needle valve is worn, as shown in the illustration, replace it with a new valve seat. Clean the fuel passage of the mixing chamber with compressed air.

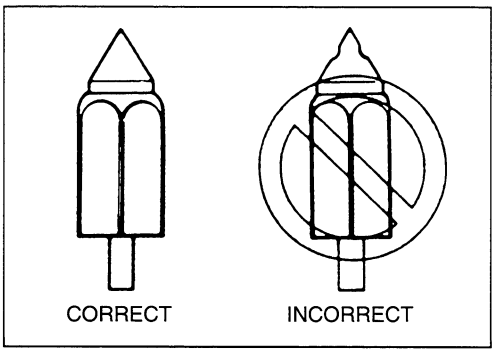

FLOAT HEIGHT ADJUSTMENT

To check the float height, turn the carburetor upside down. Gradually lower the float and observe the clearance between the float tongue and the end of the needle valve. When the tongue just begins to contact the end of the needle valve, stop lowering the float and hold it. Then, measure the float height from the float chamber mating surface.
Use vernier calipers to measure the float height.
Bend the tongue as necessary to bring height Ⓐ to the proper specification.

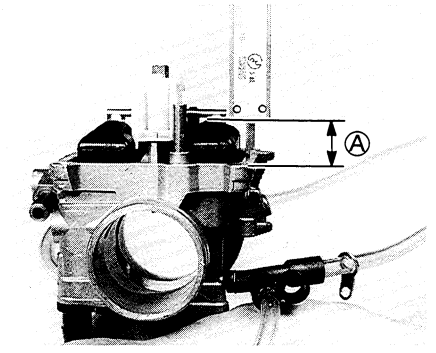

NOTE:
When measuring the float height, remove the O-ring.

TOOL 09900-20101: Vernier calipers
Float height Ⓐ: 16.0±1.0 mm (0.63±0.04 in)

REASSEMBLY AND REMOUNTING

Reassemble and remount the carburetor in the reverse order of removal and disassembly. Pay attention to the following points:

- Adjust the pilot air screw. (See p. 4-3.)
- Install the throttle valve along with the top cap.
- Install the throttle valve with its cutaway ① facing towards the inlet side.
- Install the carburetor.
- Align the carburetor projection ② with the slit ③ in the carburetor joint.
- After remounting the carburetor, the following adjustments are necessary.
  - ∗ Throttle cable play ..... See p. 2-6.
  - ∗ Engine idle speed ..... See P. 2-6.

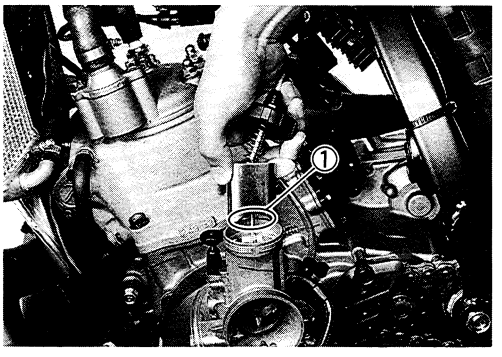

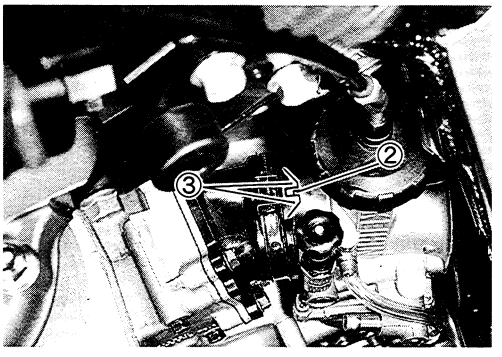

COOLING SYSTEM

CONTENTS

COOLING SYSTEM 5- 1
ENGINE COOLANT 5- 2
RADIATOR 5- 3
THERMOSTAT 5- 6
WATER PUMP 5- 8

COOLING SYSTEM

DESCRIPTION

The engine in this motorcycle is liquid cooled with passages in the cylinder, cylinder head, and radiator to allow the engine coolant to continually circulate during operation. The cooling system consists of a light-weight-aluminum radiator, a high-capacity and centrifugal water pump.

Refer to the following illustration for the cooling system routes.

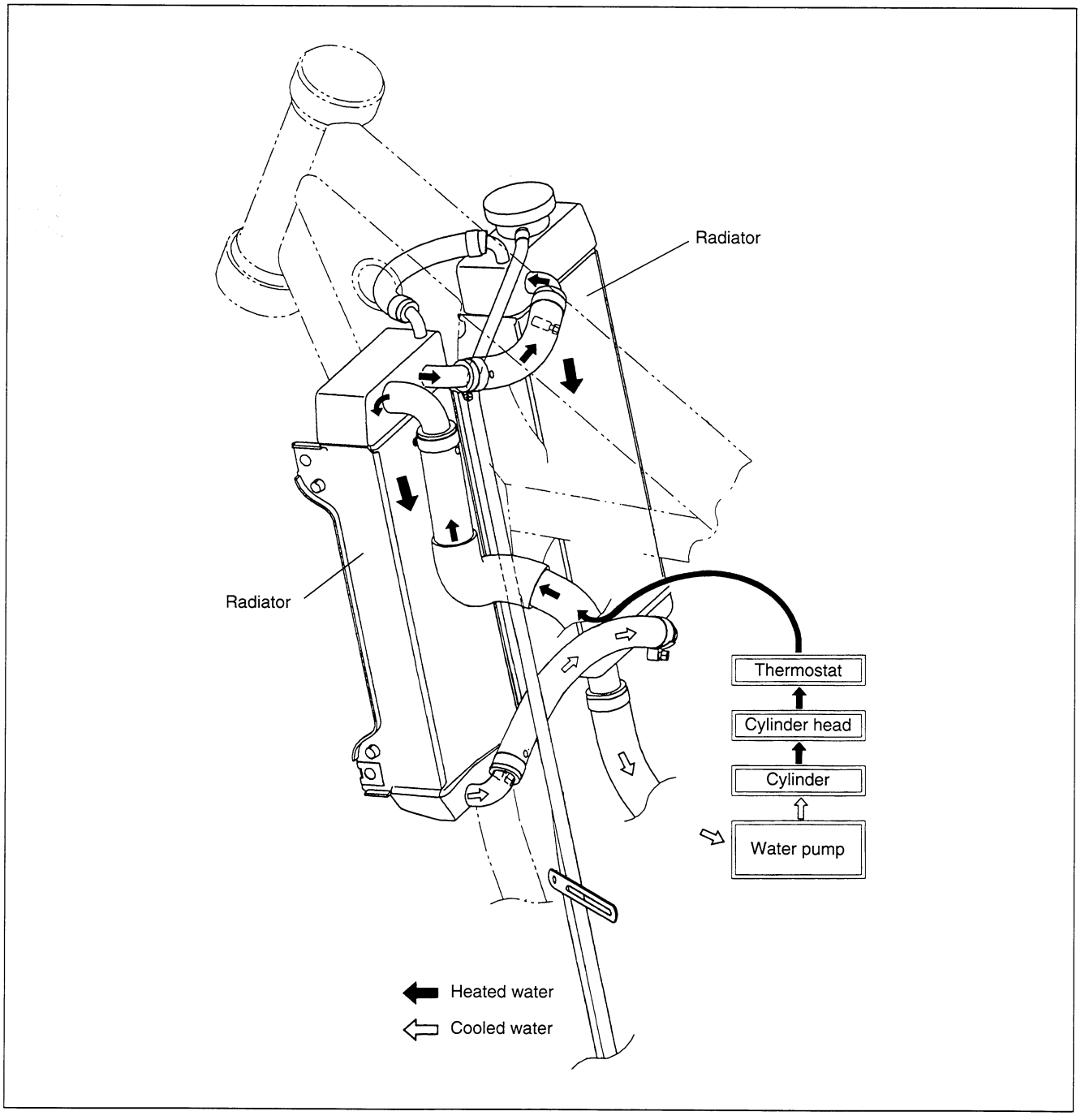

ENGINE COOLANT

At the time of manufacture, the cooling system is filled with a 50:50 mixture of distilled water and ethylene glycol anti-freeze. This 50:50 mixture will provide the optimum corrosion protection, excellent heat protection, and will protect the cooling system from freezing at temperatures above –31 °C (–24 °F).
If the motorcycle will be exposed to temperatures below –31 °C (–24 °F), the percentage of anti-freeze should be increased to 55% or 60%, according to figure 2.

- The characteristics of different anti-freeze vary; therefore, read the label on the anti-freeze container carefully.

⚠ CAUTION

- **Use a high-quality ethylene-glycol-based anti-freeze, mixed with distilled water. Do not mix alcohol-based anti-freezes or different brands of anti-freeze.**
- **Do not add more than 60% or less than 50% of anti-freeze into the engine coolant.**

⚠ WARNING

- **The engine must be cool before servicing the cooling system.**
- **You can be injured by scalding fluid or steam if you open the radiator cap when the engine is hot. Wait until the engine has cooled before removing the radiator cap.**
- **If engine coolant contacts the skin, wash it thoroughly with water.**
- **If engine coolant gets into the eyes, flush them with water and immediately call a physician.**
- **If engine coolant is swallowed, induce vomiting and call a physician immediately.**
- **Keep engine coolant away from children.**

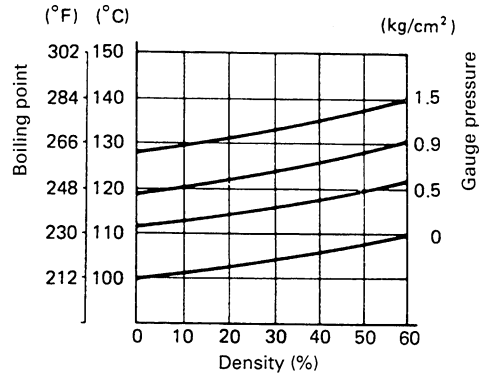

Fig. 1 Engine coolant density-boiling point curve

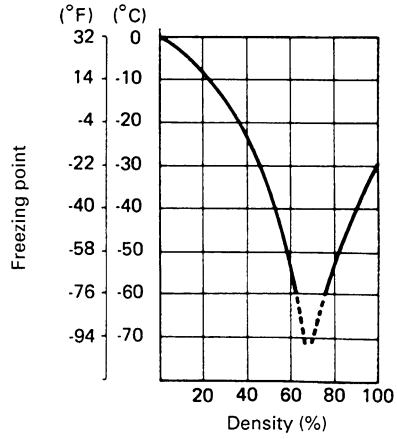

Fig. 2 Engine coolant density-freezing point curve

RADIATOR

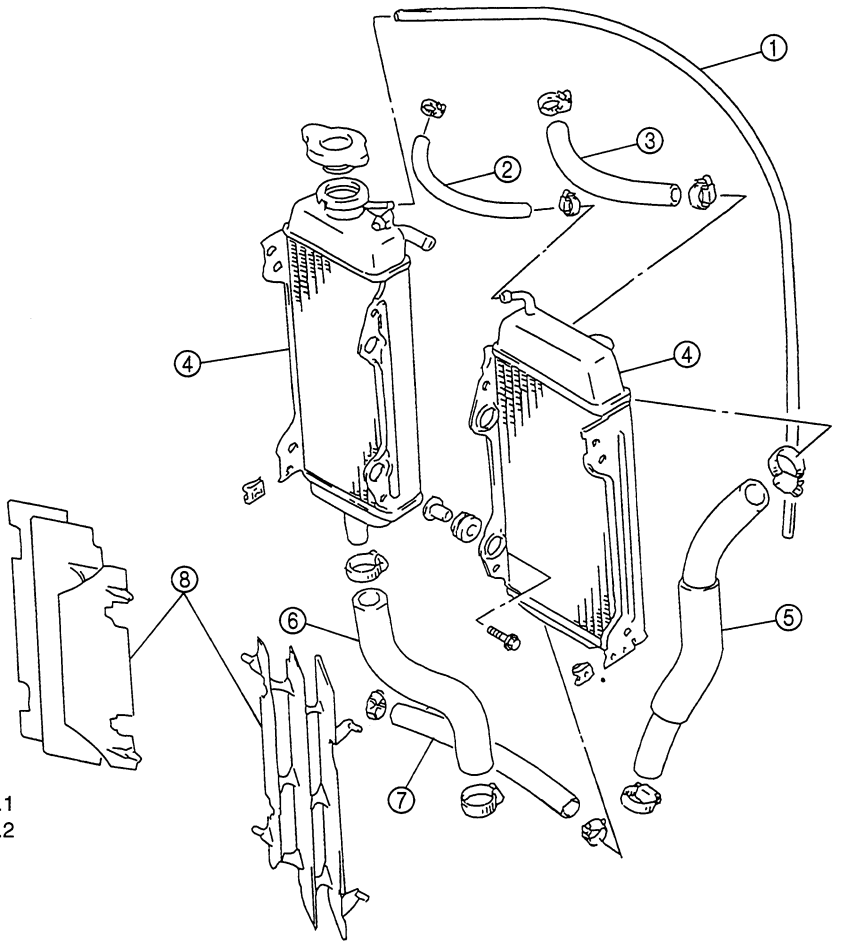

① Radiator overflow hose
② Upper radiator hose No.1
③ Upper radiator hose No.2
④ Radiators
⑤ Radiator inlet hose
⑥ Radiator outlet hose
⑦ Lower radiator hose
⑧ Radiator covers

RADIATOR INSPECTION

Before removing the radiator and draining the engine coolant, check the following.

1 Check the cooling system for leaks with a radiator tester ①. Remove the radiator cap and connect the radiator tester to the filler. Pressurize the cooling system (120 kPa (12 kg/cm^2, 17 psi)) and check if it holds the specified pressure for 10 seconds. If the pressure decreases, check the entire cooling system for leaks. If a leak is found, replace the defective part.

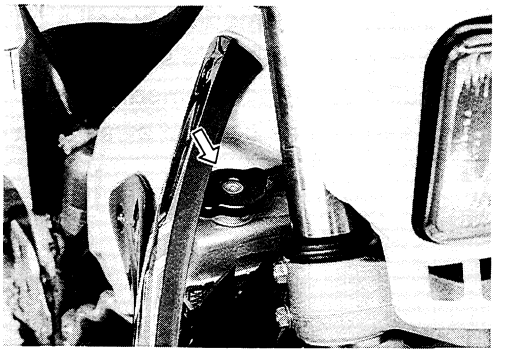

⚠ WARNING

- **Do not remove the radiator cap when the engine is hot.**
- **When removing the radiator cap tester, put a rag on the filler to prevent the engine coolant from spraying out.**

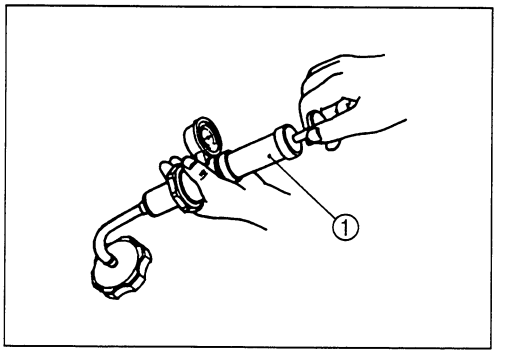

⚠ CAUTION

Do not exceed the radiator cap release pressure, or the radiator cap, and subsequently the radiator, can be damaged.

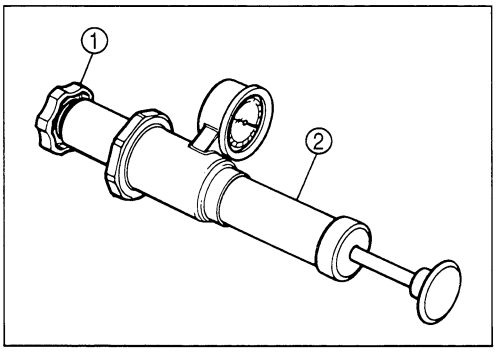

2 Check the radiator cap ① using a radiator tester ②.
Attach the radiator tester to the radiator cap as shown. Slowly apply pressure to the radiator cap; do not exceed 110 ±0.15 kPa (1.1±0.15 kg/cm^2, 15.6±2.1 psi). If the radiator cap does not hold the pressure for at least 10 seconds, replace it.

Radiator cap release pressure: 110 ± 15 kPa (1.1±0.15 kg/cm^2, 15.6±2.1 psi)

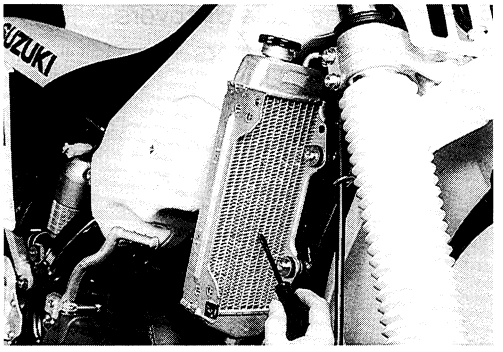

3 Check the radiator for dirt and other foreign materials. If any are found, clean the radiator using compressed air. Also, repair any bent or dented fins using a small screwdriver.
4 Check all the water hoses for cracks, flat spots, or loose connections. Replace any damaged hoses and properly tighten any loose connections.

RADIATOR REMOVAL

- Remove the radiator covers. (See p. 6-2.)
- Remove the fuel tank. (See p. 4-2.)
- Drain the engine coolant. (See p. 2-8.)

∗ The engine must be cool before servicing the cooling system.
∗ You can be injured by scalding fluid or steam if you open the radiator cap when the engine is hot. Wait until the engine has cooled before removing the radiator cap.
∗ If engine coolant contacts the skin, wash it thoroughly with water.
∗ If engine coolant gets into the eyes, flush them with water and immediately call a physician.
∗ If engine coolant is swallowed, induce vomiting and call a physician immediately.
∗ Keep engine coolant away from children.

- Disconnect the radiator hoses.

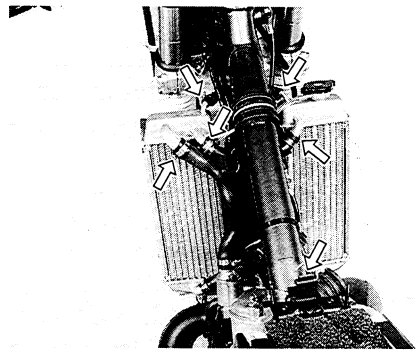

- Remove the radiator covers.
- Remove the radiators.

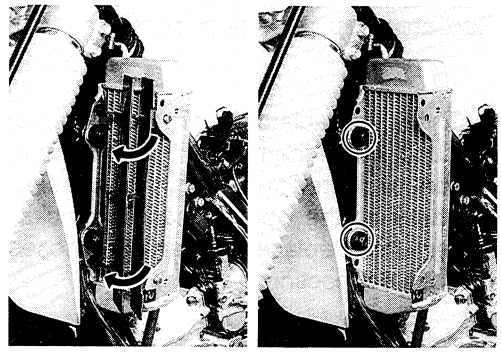

INSTALLATION

Install the radiators in the reverse order of removal. After installing the radiators, be sure to add the specified amount of engine coolant. (See pp. 2-8 and 2-9.)

THERMOSTAT

REMOVAL

- Remove the seat and radiator covers. (See p. 6-2.)
- Remove the fuel tank. (See p. 4-2.)
- Drain the engine coolant. (See p. 2-8.)

⚠ WARNING

- **The engine must be cool before servicing the cooling system.**
- **You can be injured by scalding fluid or steam if you open the radiator cap when the engine is hot. Wait until the engine has cooled before removing the radiator cap.**
- **If engine coolant contacts the skin, wash it thoroughly with water.**
- **If engine coolant gets into the eyes, flush them with water and immediately call a physician.**
- **If engine coolant is swallowed, induce vomiting and call a physician immediately.**
- **Keep engine coolant away from children.**

- Disconnect the radiator hose.
- Remove the thermostat case ①.
- Remove the thermostat.

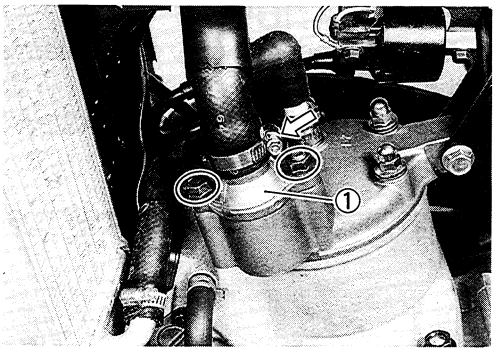

INSPECTION

Inspect the thermostat for cracks or damage.

Check the thermostat as follows.

- Pass a string ① between the flange as shown.

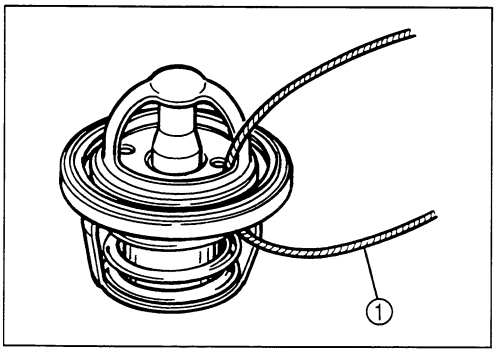

- Immerse the thermostat in a container of water and keep the thermostat suspended as shown. Slowly heat the container (e.g., on a stove) and observe the thermometer's reading.

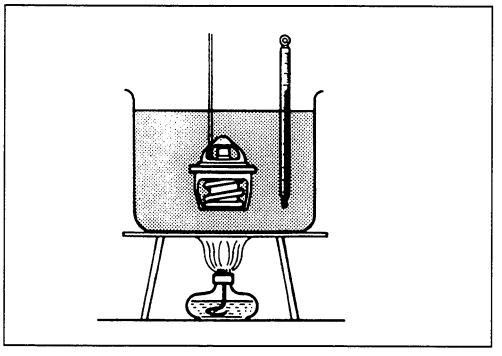

- When the thermostat's valve begins to open, record the thermometer's reading. Make sure the thermostat's valve begins to open at the specified temperature.

Thermostat valve opening temperature: 60˚C (140˚F)

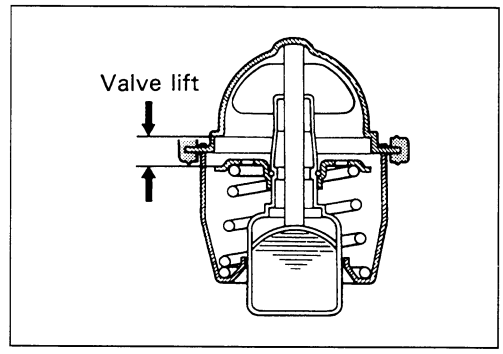

- Continue heating the container until the water temperature is above 75˚C (167˚F).
- When the water temperature reaches 75˚C (167˚F), the thermostat's valve should have raised 5.5 mm (0.22 in).

Thermostat valve lift: over 5.5 mm at 75˚C (over 0.22 in at 167˚F)

- If the thermostat is faulty in either of these two checks, replace it.

INSTALLATION

- The air bleeder hole Ⓐ of the thermostat must face towards the intake side.
- Apply SUZUKI SUPER GREASE "A" to the rubber seal on the thermostat.

99000-25010: SUZUKI SUPER GREASE "A"

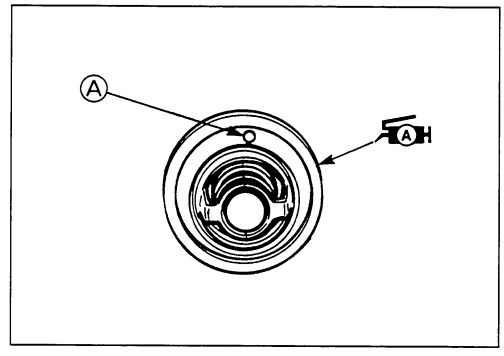

- Tighten the thermostat case bolts to the specified torque.

Thermostat case bolt: 10 N·m (1.0 kg-m, 7.0 lb-ft)

- After installing the thermostat, be sure to add the specified amount of engine coolant. (See pp. 2-8 and 2-9.)

WATER PUMP

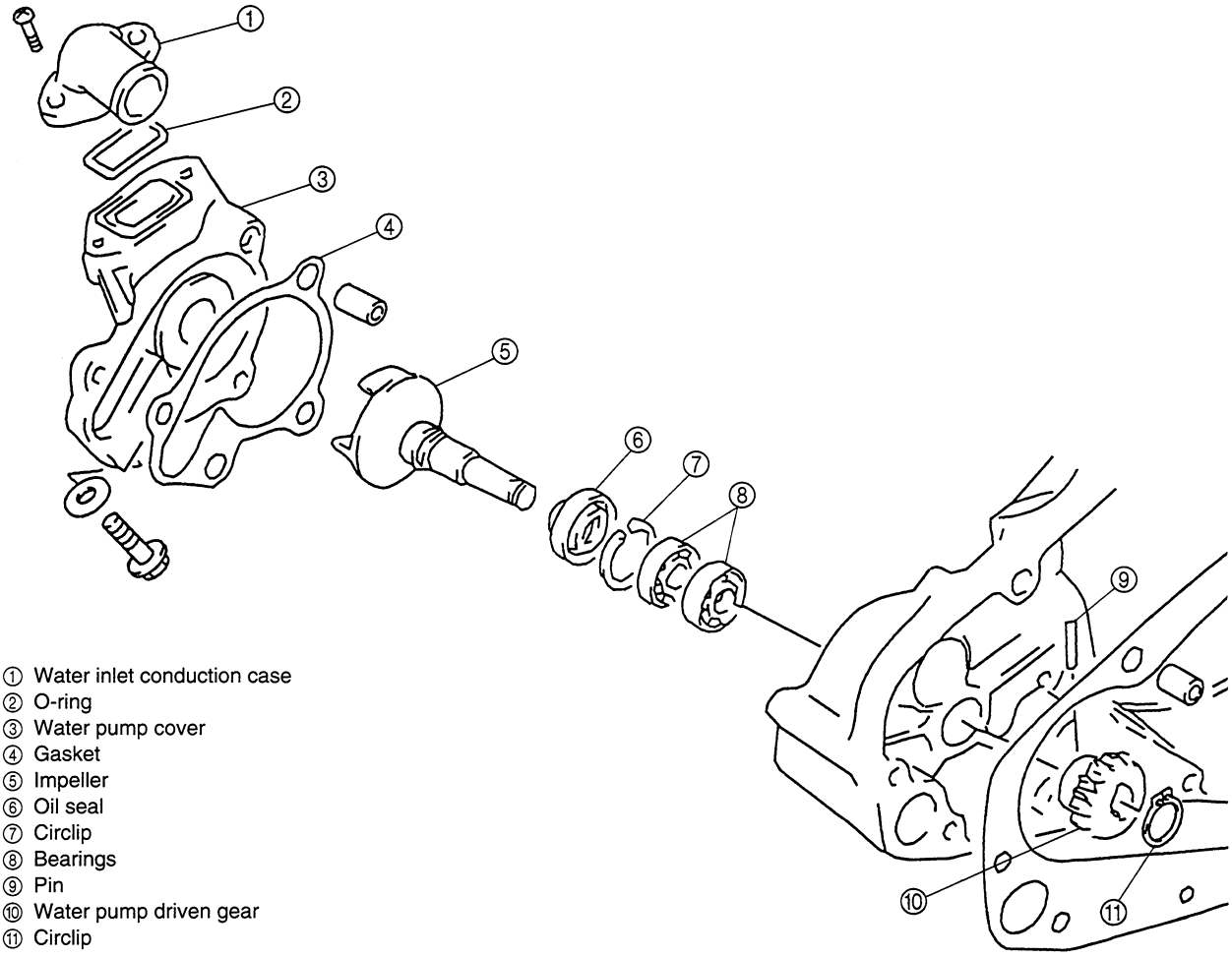

① Water inlet conduction case
② O-ring
③ Water pump cover
④ Gasket
⑤ Impeller
⑥ Oil seal
⑦ Circlip
⑧ Bearings
⑨ Pin
⑩ Water pump driven gear
⑪ Circlip

REMOVAL AND DISASSEMBLY

- Drain the engine coolant. (See p. 2-8.)
- Disconnect the radiator hose.
- Remove the water pump cover ①.

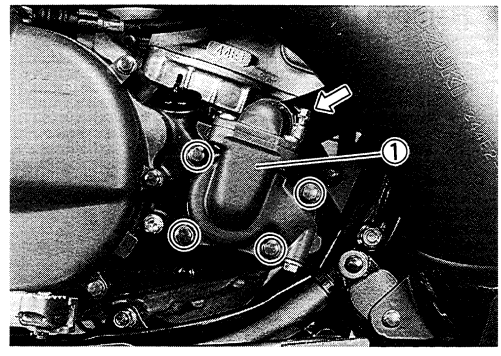

- Disconnect the clutch cable ②.
- Remove the kick crank ③ and brake pedal ④.
- Remove the clutch cover ⑤.

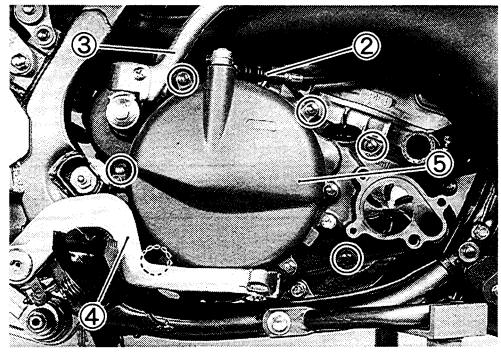

- Remove the circlip and water pump driven gear ①.

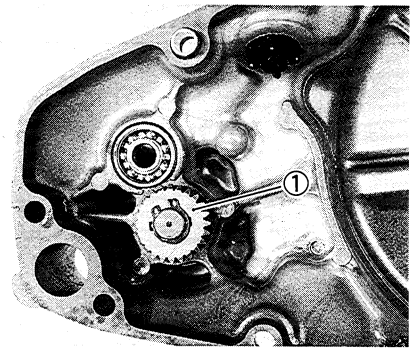

- Remove the pin ② and impeller shaft ③.

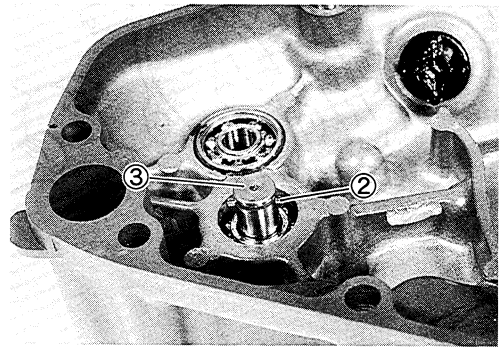

- Remove the oil seal using the special tool.

TOOL 09913-50121: Oil seal remover

NOTE:
If the oil seal shows no signs of wear or damage, there is no need to remove it.

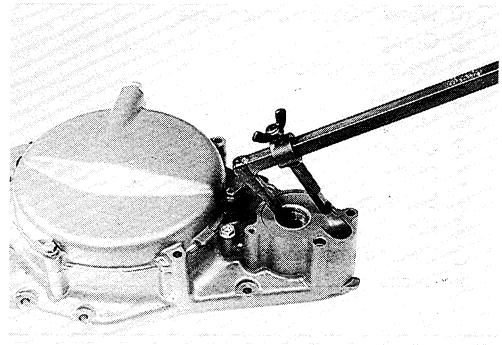

- Remove the circlip ④.

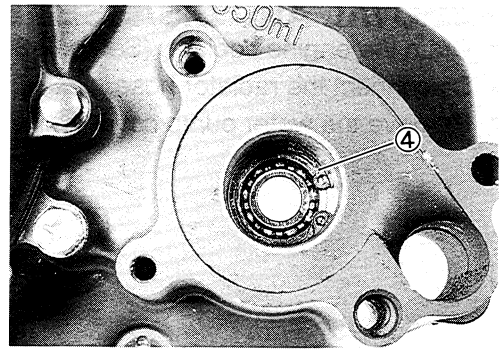

- Drive out the inner and outer water pump bearings using the special tool.

TOOL 09941-50111: Bearing remover

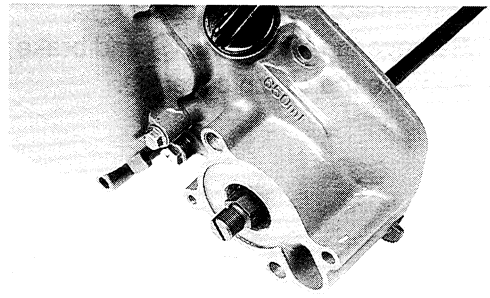

⚠ CAUTION

The removed bearing should be replaced with a new one.

NOTE:
If the bearing makes no abnormal noises or shows no signs of wear or damage, there is no need to remove it.

INSPECTION

WATER PUMP BEARING

Turn the inner race and check the bearing play. If abnormal noise occurs or if rough movement is noted, replace the bearing with a new one.

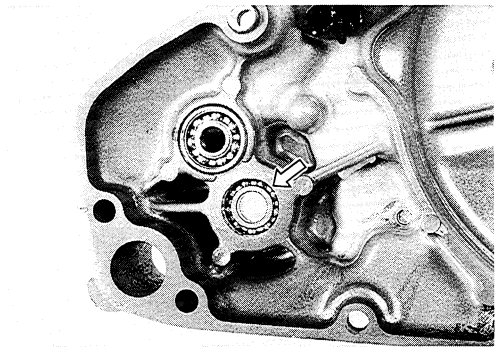

OIL SEAL

Inspect the oil seal for damage, especially the sealing face. Replace the oil seal if it shows any signs of damage or leakage.

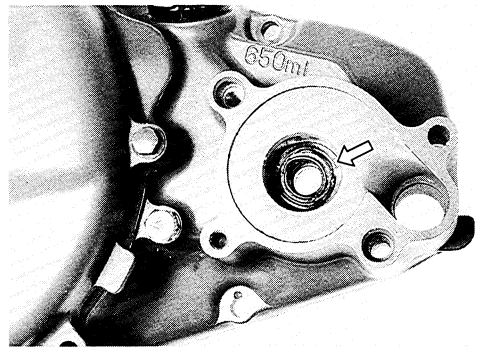

REASSEMBLY AND INSTALLATION

Reassemble and remount the water pump in the reverse order of removal and disassembly. Pay attention to the following points:

- Install the water pump bearings using the special tool.

TOOL 09943-88211: Bearing installer

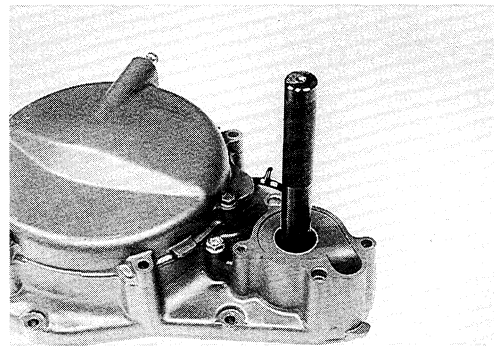

- Apply SUZUKI SUPER GREASE "A" to the oil seal lip before installation.

1207B 99000-25010: SUZUKI SUPER GREASE "A"

- Install the new oil seal with a suitable size socket as shown.

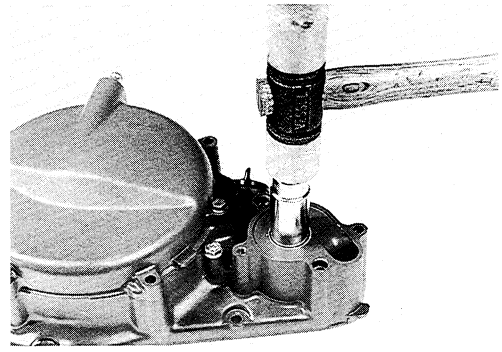

- Install a new gasket and tighten the water pump cover.
- After installing the water pump, be sure to add the specified amount of engine coolant. (See pp. 2-8 and 2-9.)

CHASSIS

CONTENTS

SEAT, FRAME COVERS, HEADLIGHT COVER, AND RADIATOR COVERS 6- 1
CONSTRUCTION 6- 1
REMOVAL 6- 2
REMOUNTING 6- 2
FRONT WHEEL 6- 3
CONSTRUCTION 6- 3
REMOVAL 6- 4
INSPECTION AND DISASSEMBLY 6- 5
REASSEMBLY AND REMOUNTING 6- 6
FRONT FORK 6- 9
CONSTRUCTION 6- 9
REMOVAL AND DISASSEMBLY 6-10
INSPECTION 6-12
REASSEMBLY AND REMOUNTING 6-12
SUSPENSION SETTING 6-15
STEERING 6-16
CONSTRUCTION 6-16
REMOVAL AND DISASSEMBLY 6-16
INSPECTION AND DISASSEMBLY 6-18
REASSEMBLY AND REMOUNTING 6-18
REAR WHEEL 6-21
CONSTRUCTION 6-21
REMOVAL 6-22
INSPECTION AND DISASSEMBLY 6-23
REASSEMBLY AND REMOUNTING 6-24
REAR SUSPENSION 6-26
CONSTRUCTION 6-26
REMOVAL 6-28
INSPECTION AND DISASSEMBLY 6-29
REASSEMBLY 6-33
REMOUNTING 6-34
FINAL INSPECTION AND ADJUSTMENT 6-35
SUSPENSION SETTING 6-35
FRONT BRAKE 6-37
CONSTRUCTION 6-37
BRAKE PAD REPLACEMENT 6-38
BRAKE FLUID REPLACEMENT 6-38
BRAKE CALIPER REMOVAL AND DISASSEMBLY 6-39
BRAKE CALIPER INSPECTION 6-40
BRAKE CALIPER REASSEMBLY AND REMOUNTING 6-40
BRAKE DISC INSPECTION 6-41
MASTER CYLINDER REMOVAL AND DISASSEMBLY 6-42
MASTER CYLINDER INSPECTION 6-43
MASTER CYLINDER REASSEMBLY AND REMOUNTING 6-43
REAR BRAKE 6-45
CONSTRUCTION 6-45
BRAKE PAD REPLACEMENT 6-46
BRAKE FLUID REPLACEMENT 6-46
BRAKE CALIPER REMOVAL AND DISASSEMBLY 6-46
BRAKE CALIPER INSPECTION 6-47
BRAKE CALIPER REASSEMBLY AND REMOUNTING 6-47
MASTER CYLINDER REMOVAL AND DISASSEMBLY 6-48
MASTER CYLINDER INSPECTION 6-49
MASTER CYLINDER REASSEMBLY AND REMOUNTING 6-50

SEAT, FRAME COVERS, HEADLIGHT COVER, AND RADIATOR COVERS

CONSTRUCTION

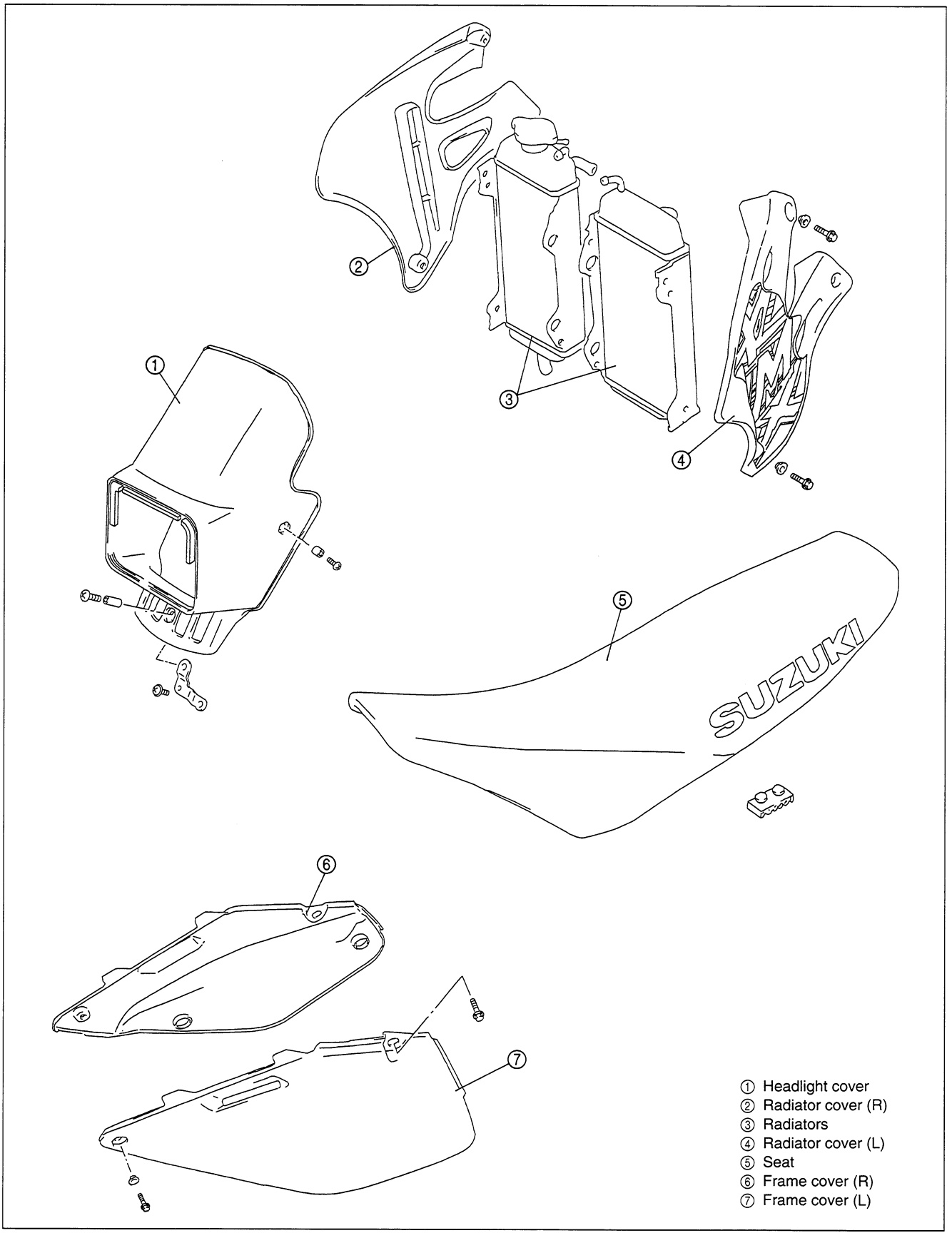

REMOVAL

SEAT

- Remove the seat ①.

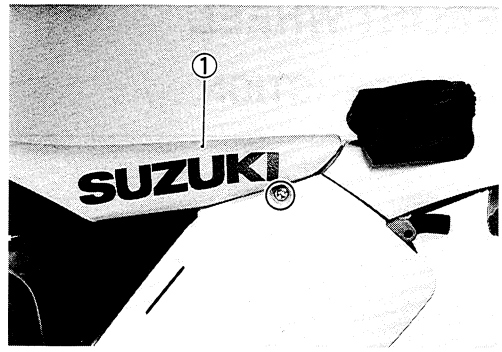

FRAME COVERS

- Remove the seat. (See p. 6-2.)
- Remove the frame covers ①.

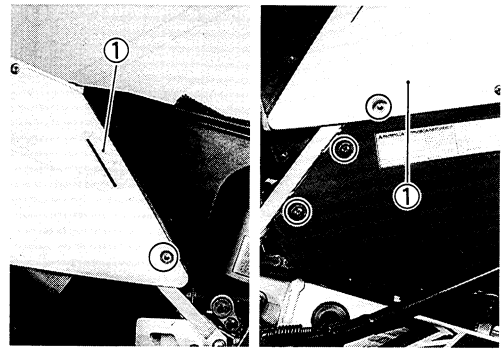

HEADLIGHT COVER

- Remove the headlight cover ①.

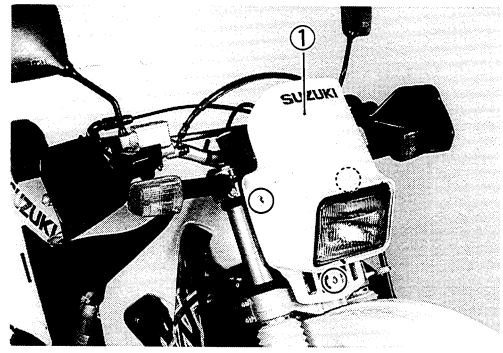

RADIATOR COVERS

- Remove the radiator covers ①.

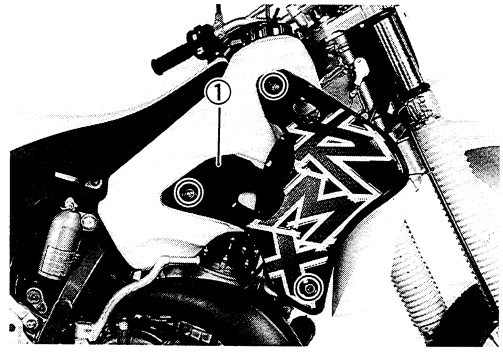

REMOUNTING

Remount the seat, frame covers, headlight cover, and radiator covers in the reverse order of removal.

FRONT WHEEL

CONSTRUCTION

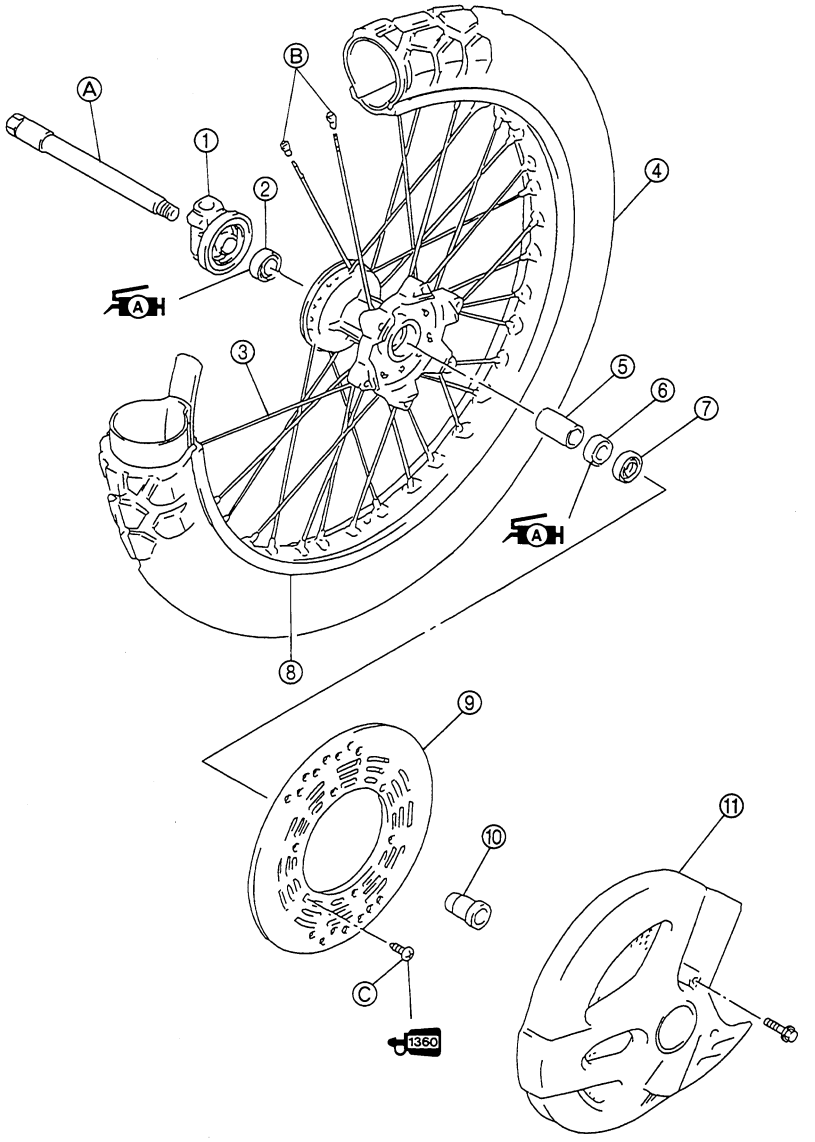

① Speedometer gearbox
② Bearing (R)
③ Spokes
④ Tire
⑤ Spacer
⑥ Bearing (L)
⑦ Oil seal
⑧ Rim
⑨ Brake disc
⑩ Spacer
⑪ Disc cover

Ⓐ Front wheel axle
Ⓑ Spoke nipples
Ⓒ Brake disc bolts

ITEM	N·m	kg-m	lb-ft
Ⓐ	65	6.5	47.0
Ⓑ	2.5	0.25	2.0
Ⓒ	10	1.0	7.0

REMOVAL

- Remove the disc cover ①.

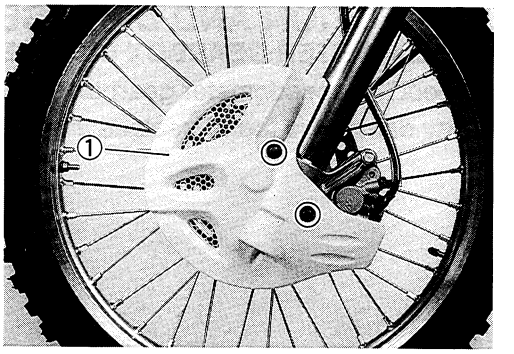

- Disconnect the speedometer cable ②.
- Loosen the front axle holder bolts ③ and front axle ④.
- Raise the front wheel off the ground using a jack or wooden block.

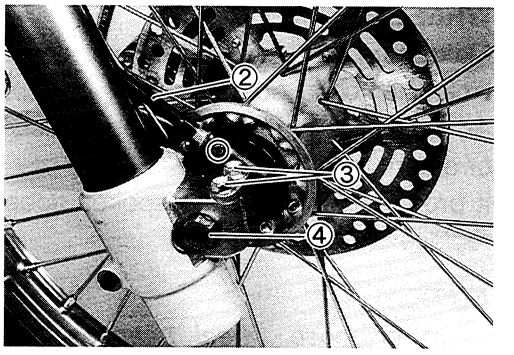

- Remove the spacer ⑤, speedometer gearbox ⑥, front axle, and front wheel.

⚠ CAUTION

Do not operate the front brake while the front wheel is removed.

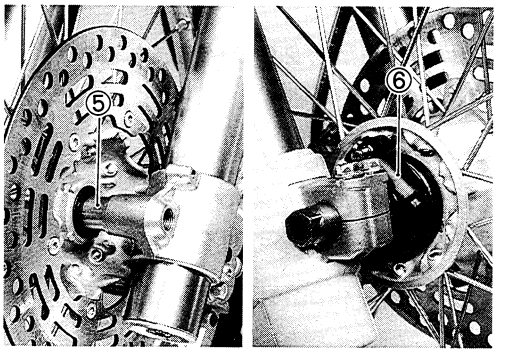

- Remove the brake disc.

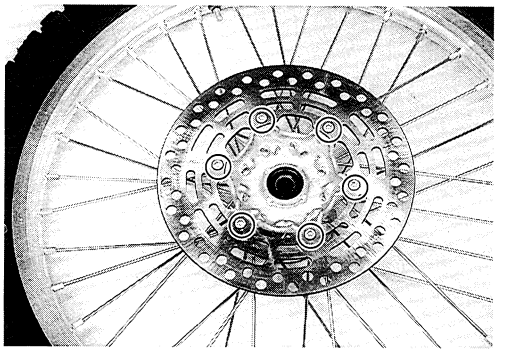

- Remove the oil seal ⑦.

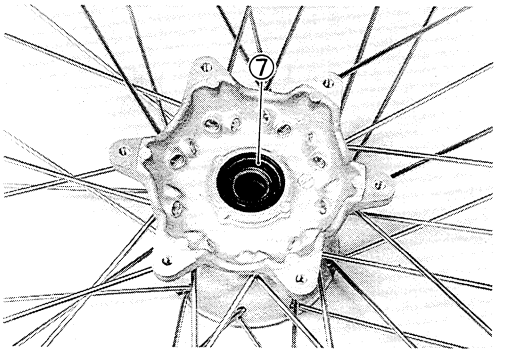

INSPECTION AND DISASSEMBLY

SPEEDOMETER GEARBOX DUST SEAL

Inspect the speedometer gearbox dust seal for damage.
If any damage is found, replace the speedometer gearbox.

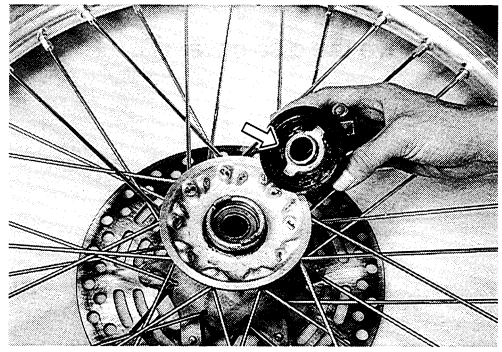

WHEEL RIM

Make sure the wheel rim runout does not exceed the service limit when checked as shown.
An excessive amount of runout is usually due to loose spokes or a bent rim.
If properly tightening the spokes does not correct the runout, replace the wheel rim.

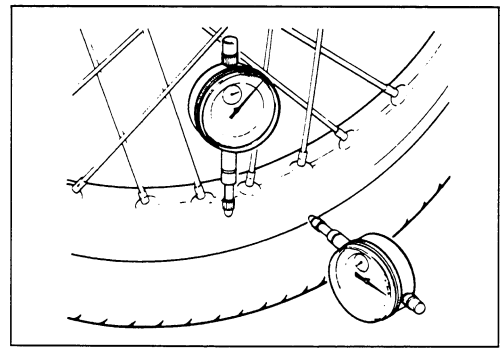

NOTE:
Worn or loose wheel bearings must be replaced before attempting to true a wheel rim.

Service Limit: 2.0 mm (0.08 in)
(axial and radial)

SPOKE NIPPLES

Make sure all the nipples are tight and retighten them as necessary using a spoke nipple wrench.

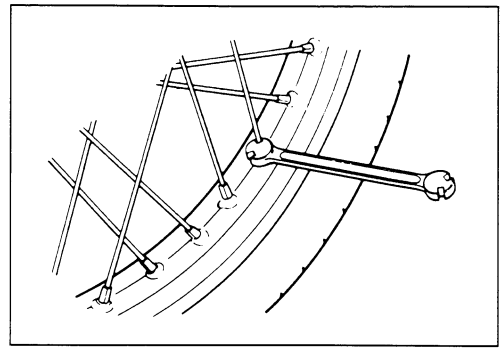

Spoke nipple: 2.5 N·m (0.25 kg-m, 2.0 lb-ft)

WHEEL BEARINGS

Inspect the play of the wheel bearings by hand while they are in the wheel. Rotate the inner race by hand to inspect for abnormal noise and smooth rotation. Replace the bearing if there is anything unusual.

Remove the wheel bearings as follows:

- Insert the bearing remover attachment into the wheel bearing.
- Insert the wedge bar from the opposite side and lock it into the slit of the bearing remover attachment.
- Drive out the wheel bearing by striking the wedge bar.

TOOL 09941-50111: Bearing remover

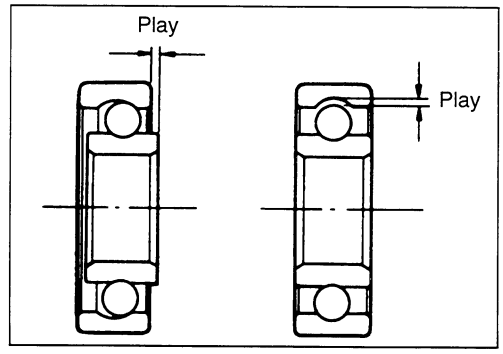

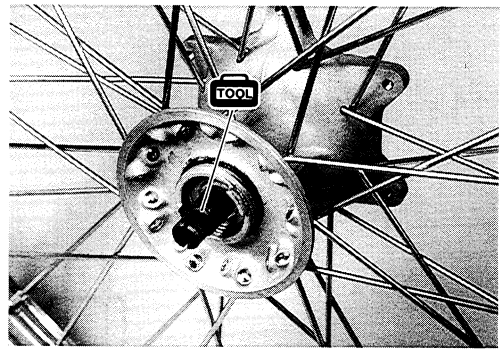

⚠ CAUTION

The removed bearing must be replaced with a new one.

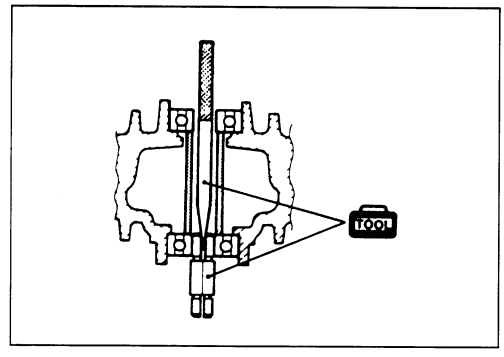

FRONT AXLE

Using a dial gauge, measure the front axle runout. If the runout exceeds the limit, replace the front axle.

Service Limit: 0.25 mm (0.010 in)

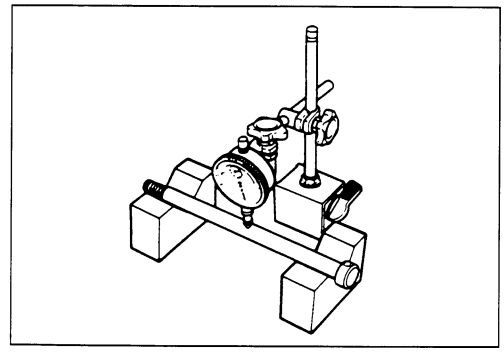

REASSEMBLY AND REMOUNTING

Reassemble and remount the front wheel in the reverse order of removal and disassembly. Pay attention to the following points:

WHEEL BEARINGS

- Apply SUZUKI SUPER GREASE "A" to the bearings before installation.

99000-25010: SUZUKI SUPER GREASE "A"

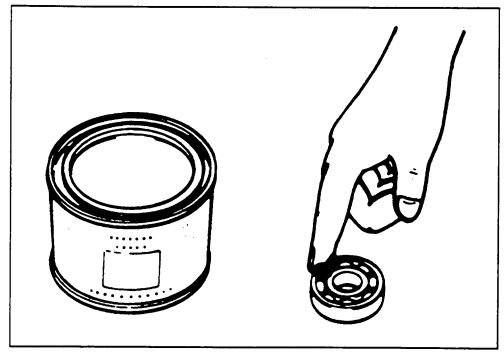

- Install the wheel bearings using the special tool.

TOOL 09924-84521: Bearing installer set

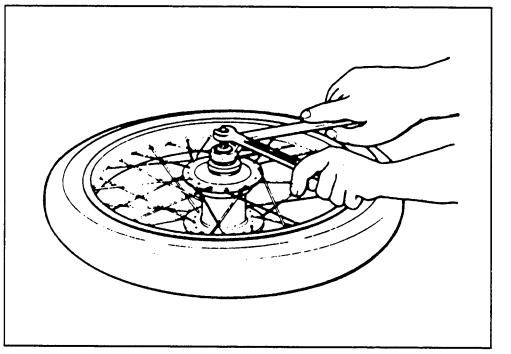

⚠ CAUTION

First, install the left wheel bearing, then install the right wheel bearing. The sealed cover on the wheel bearing must face out.

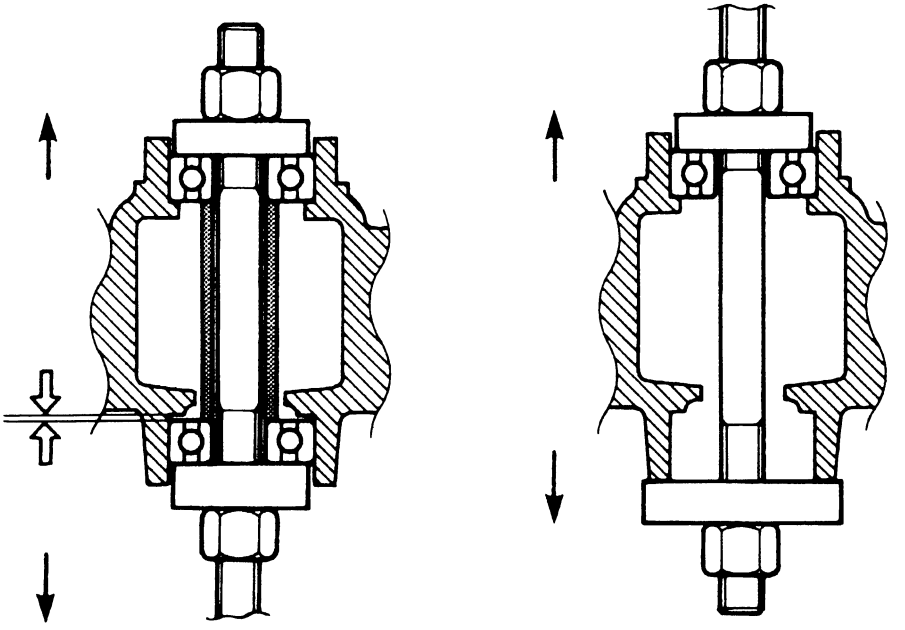

BRAKE DISC

- Make sure the brake disc is clean and free of any grease. Apply THREAD LOCK SUPER "1360" to the disc mounting bolts and tighten them to the specified torque.

1360 99000-32130: THREAD LOCK SUPER "1360"

Brake disc bolt: 10 N·m (1.0 kg-m, 7.0 lb-ft)

NOTE:
The stamped mark ① on the brake disc must face outward.

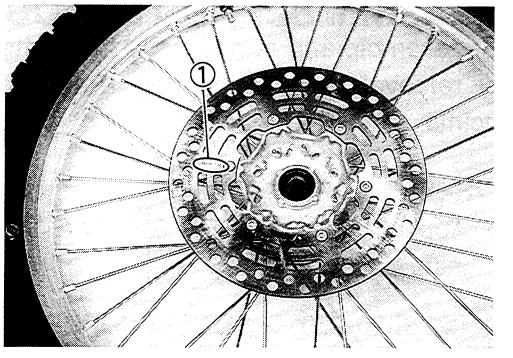

SPEEDOMETER GEARBOX

- Apply SUZUKI SUPER GREASE "A" to the teeth of the speedometer gear before installing the speedometer gearbox.
- Align the drive lugs ① with the recesses ② on the wheel hub and then fit the speedometer gearbox onto the wheel hub.

99000-25010: SUZUKI SUPER GREASE "A"

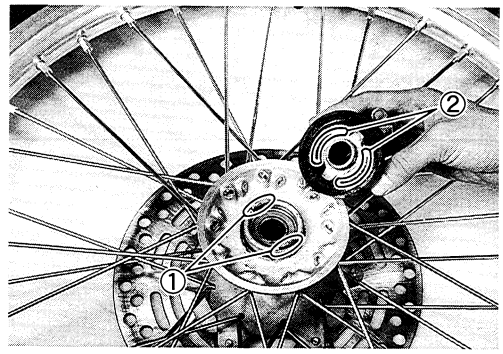

- Align the stopper ③ on the speedometer gearbox with the lug ④ on the front fork.

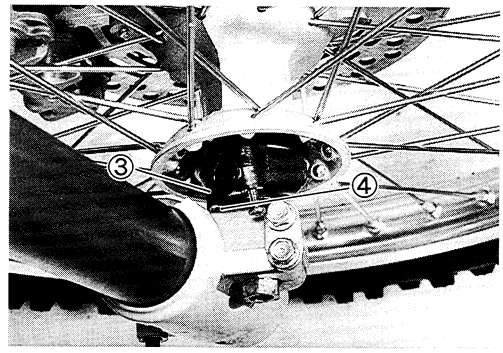

FRONT AXLE

- Tighten the front axle ① to the specified torque.

Front axle: 65 N·m (6.5 kg-m, 47.0 lb-ft)

- Tighten the front axle holder bolt ② to the specified torque.

Front axle holder bolt: 18 N·m (1.8 kg-m, 13.0 lb-ft)

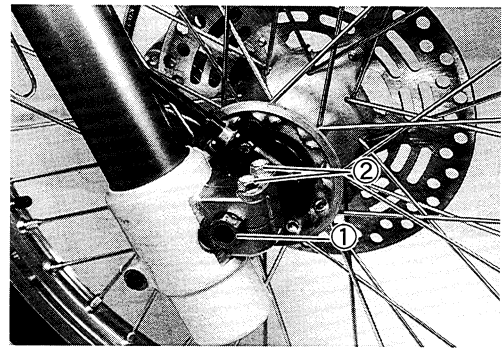

FRONT FORK

CONSTRUCTION

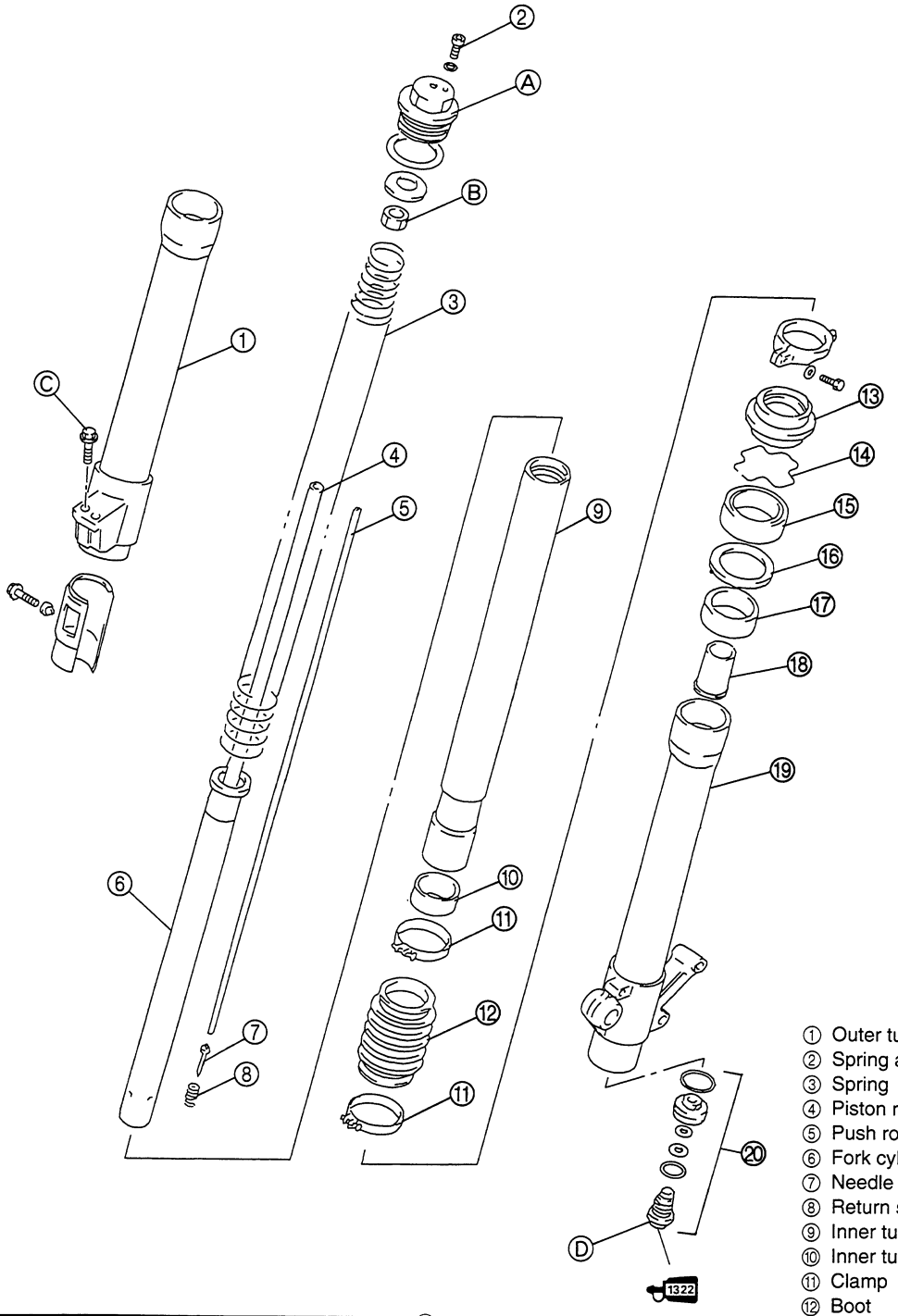

ITEM	N·m	kg-m	lb-ft
Ⓐ	23	2.3	16.5
Ⓑ	22	2.2	16.0
Ⓒ	18	1.8	13.0
Ⓓ	80	8.0	58.0

Ⓐ Front fork cap bolt
Ⓑ Piston rod locknut
Ⓒ Front axle holder bolt
Ⓓ Center bolt

① Outer tube (R)
② Spring adjuster bolt
③ Spring
④ Piston rod
⑤ Push rod
⑥ Fork cylinder
⑦ Needle
⑧ Return spring
⑨ Inner tube
⑩ Inner tube slide metal
⑪ Clamp
⑫ Boot
⑬ Dust seal
⑭ Oil seal stopper ring
⑮ Oil seal
⑯ Oil seal retainer
⑰ Outer tube slide metal
⑱ Oil lock piece
⑲ Outer tube (L)
⑳ Center bolt assembly

REMOVAL AND DISASSEMBLY

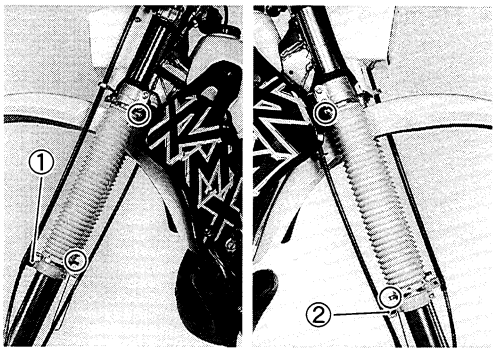

- Remove the front wheel. (See p. 6-4.)
- Remove the front brake caliper (See p. 6-39.)
- Remove the brake hose clamp screw ① and speedometer cable guide screw ②.
- Loosen the boot clamp screws.

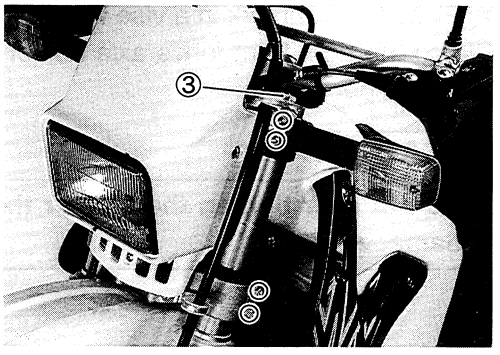

- Remove the front fork after loosening the front fork upper and lower clamp bolts.

NOTE
Slightly loosen the front fork cap bolt ③ to facilitate later disassembly.

- Remove the boot.

- Remove the cap bolt out of the inner tube and slowly pull down the inner tube.
- Hold the piston rod locknut with a 17-mm wrench.
- Remove the cap bolt, washer, and spring.

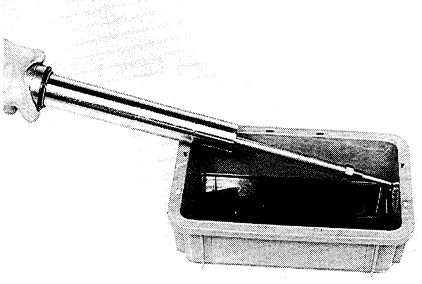

- Invert the fork and stroke it several times to drain out the fork oil.

NOTE:
Hold the fork inverted for a few minutes to drain the oil.

- Remove the push rod ④, needle ⑤, and return spring ⑥.

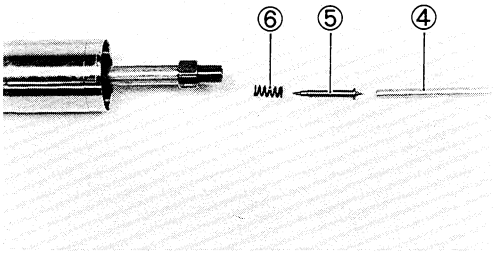

- Remove the locknut ①.

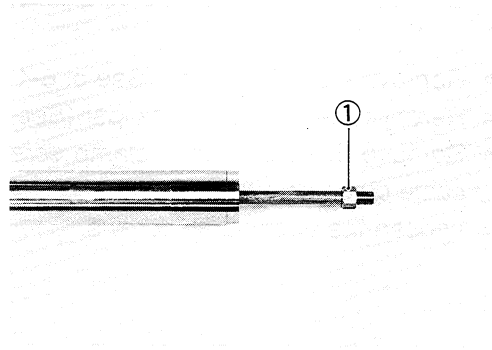

- Place the front fork in a vise with soft jaws.

Clamp the right front fork's axle holder and the left front fork's brake caliper bracket.

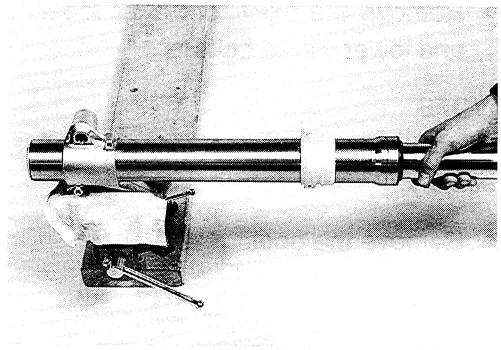

⚠ CAUTION

Do not over tighten the vise or the outer tube will be damaged.

- Remove the dust seal ② and stopper ring ③.
- Slowly pull out the inner tube.

NOTE:
Be careful not to damage the inside of the inner tube.

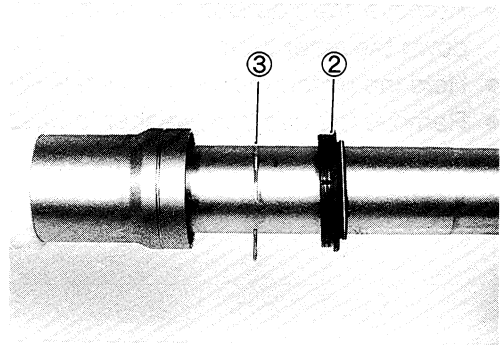

- Remove the center bolt ④ using the special tool.

TOOL 09940-52890: Front fork inner rod holder.

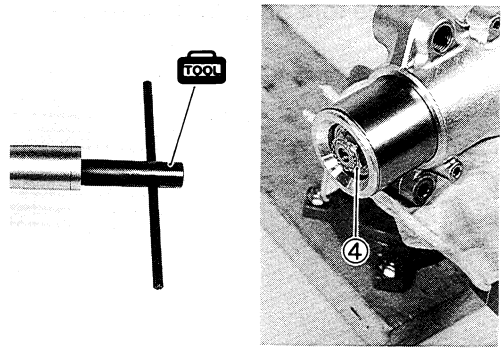

⚠ CAUTION

Do not use an impact wrench to remove the center bolt.

- Remove the fork cylinder ⑤.

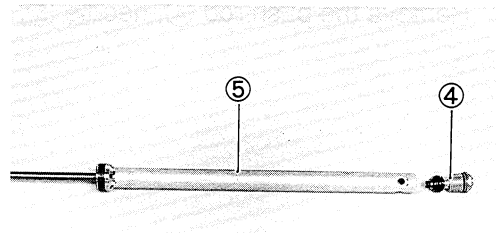

- Remove the following parts.

① Oil seal
② Oil seal retainer
③ Outer tube slide metal
④ Inner tube slide metal
⑤ Oil lock piece

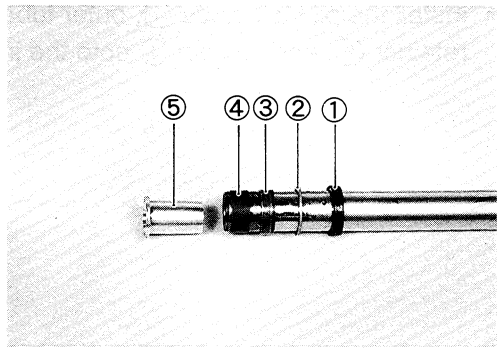

⚠ CAUTION

The outer and inner tube's slide metals must be replaced along with the oil seal and dust seal when assembling the front fork.

INSPECTION

FORK SPRING

Measure the fork spring free length. If it is shorter than the service limit, replace it with a new one.

Service limit
Front fork spring free length: 525.5 mm (20.7 in)

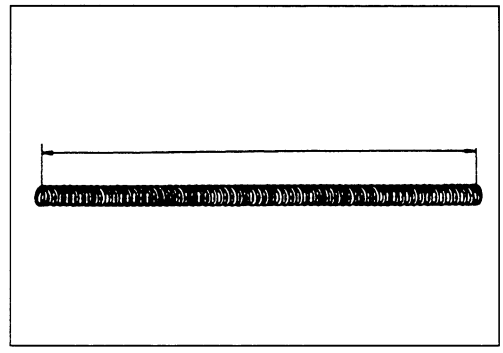

INNER AND OUTER TUBES

Inspect the inner tube sliding surface and outer tube sliding surface for any scuffing.

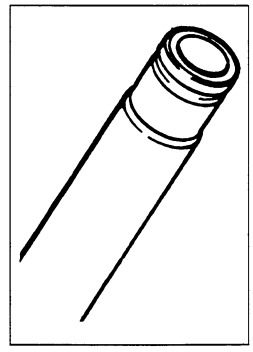

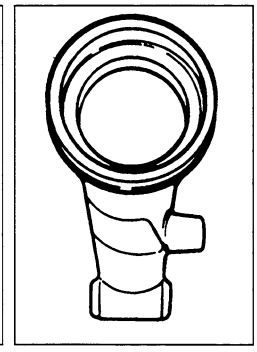

REASSEMBLY AND REMOUNTING

Reassemble and remount the front fork in the reverse order of removal and disassembly. Pay attention to the following points:

SLIDE METALS AND OIL AND DUST SEALS

- Hold the inner tube vertically, clean the metal groove, and install the inner tube slide metal by hand.

⚠ CAUTION

Do not damage the Teflon coated surface of the inner tube's slide metal when mounting it.

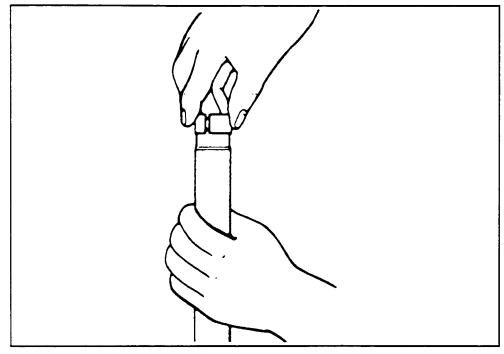

- Install the oil lock piece ①, outer tube slide metal ②, oil seal retainer ③, and oil seal ④ onto the inner tube.

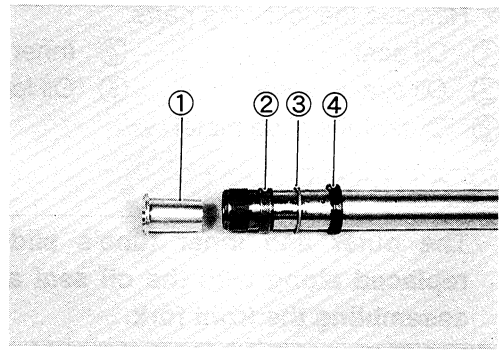

- Insert the inner tube into the outer tube and install the oil seal ⑤ using the special tool.

TOOL 09940-52861: Front fork oil seal installer

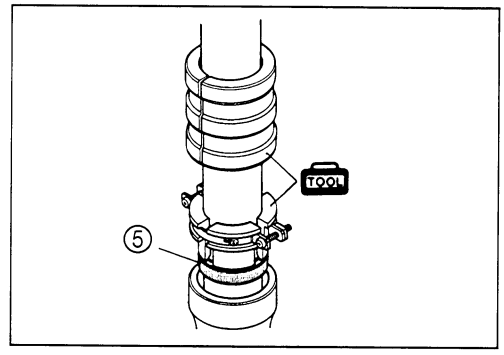

CENTER BOLT

- Apply THREAD LOCK SUPER "1322" to the center bolt and tighten it to the specified torque using the special tool SUPER.

1342 99000-32050: THREAD LOCK SUPER "1322"

TOOL 09940-52890: Front fork inner rod holder

Center bolt: 80 N·m (8.0 kg-m, 58.0 lb-ft)

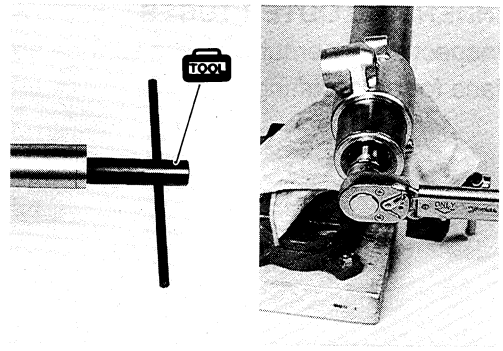

LOCKNUT

- Install the locknut to the specified position Ⓐ on the piston rod as shown.

Locknut position (from the top of the inner rod to the top of the locknut): 14 mm (0.55 in)

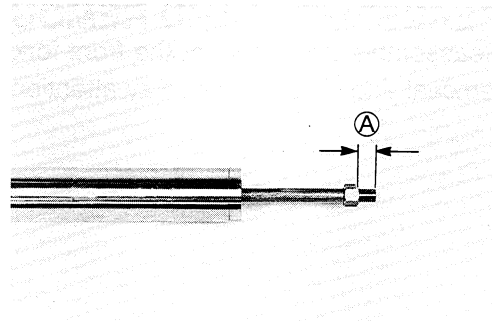

- Install the return spring ⑥, needle ⑦, and push rod ⑧ into the piston rod ⑨.

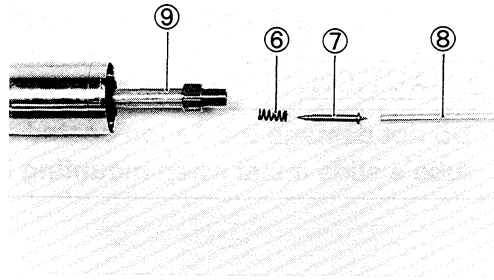

FORK OIL

- Pour the specified fork oil into the inner tube.

Fork oil type: Fork oil SS05

FORK 99000-99001-SS05: SUZUKI FORK OIL SS05

Capacity (each leg): 639 ml (21.6/22.5 US/Imp oz)

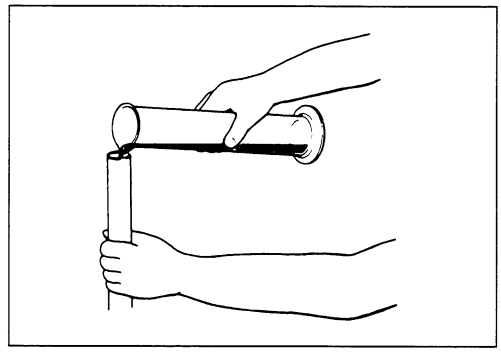

- Hold the front fork in a vertical position and adjust the fork oil level using the special tool.

TOOL 09943-74111: Fork oil level gauge

Oil level: 109 mm (4.3 in)

NOTE:
Before adjusting the oil level, remove the fork spring and compress the inner tube fully.

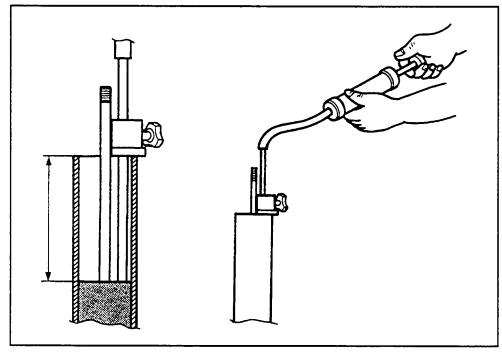

FORK SPRING

- Install the fork spring.

NOTE:
The end of the fork spring with the smaller inside diameter should be at the bottom of the front fork.

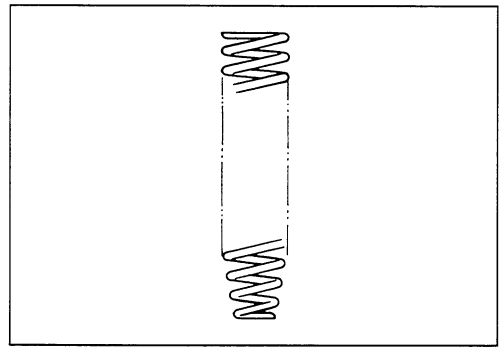

- Before installing the cap bolt turn the rebound damping force adjuster to the softest position.
- Pull up the piston rod using the special tools.

TOOL 09940-52841: Front fork inner rod holder
09940-94922: Front fork stopper plate

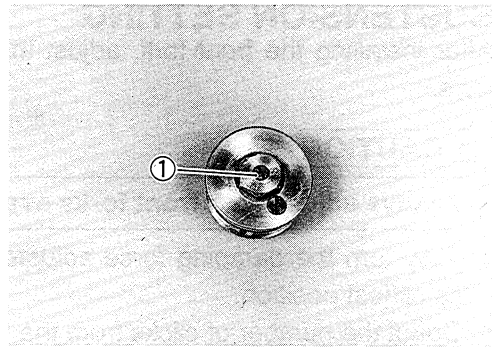

- Tighten the piston rod locknut to the specified torque.

Piston rod locknut: 23 N·m (2.3 kg-f, 16.5 lb-ft)

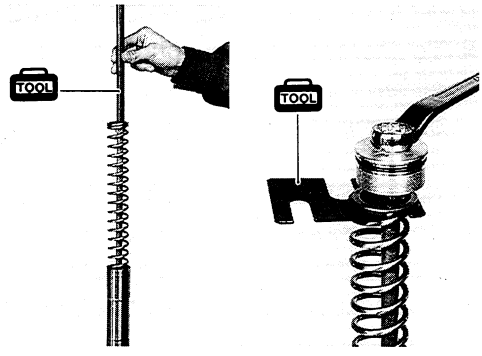

- When remounting the front fork, make sure the upper surface of the inner tube is above the upper surface of the handlebar holder at the specified height Ⓐ.

Inner tube position (from the upper surface of the inner tube to the upper surface of the handlebar holder):
10 mm (0.39 in)

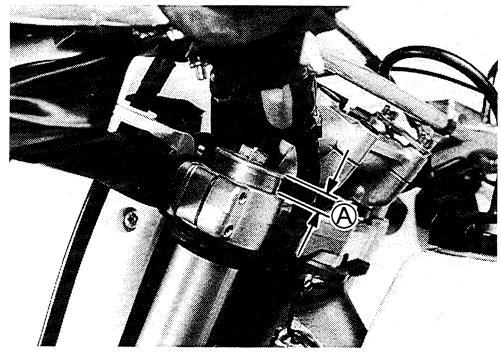

- Tighten the front fork lower clamp bolts ①, front fork upper clamp bolt ②, and front fork cap bolt ③ to the specified torque.

Front fork lower clamp bolt ①: 26 N·m (2.6 kg-m, 19.0 lb-ft)
Front fork upper clamp bolt ②:26 N·m (2.6 kg-m, 19.0 lb-ft)
Front fork cap bolt ③: 23 N·m (2.3 kg-m, 16.5 lb-ft)

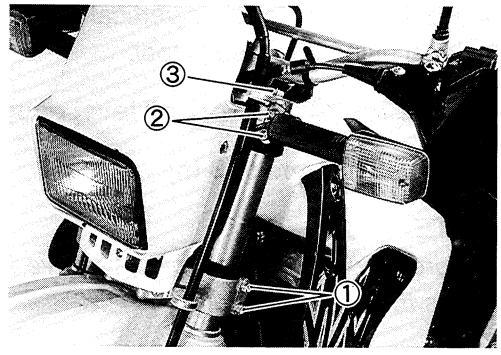

- Install the front brake caliper. (See p. 6-39.)
- Install the front wheel. (See p. 6-8.)

SUSTENSION SETTING

After installing the front fork, adjust the damping force as follows.

⚠ CAUTION

Always adjust both front forks evenly.

- Fully turn the damping force adjuster clockwise until it is at its stiffest position.
- Count the number of clicks from the fully turned-in position.

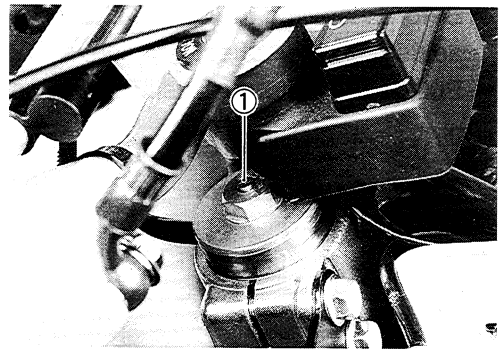

REBOUND DAMPING FORCE ADJUSTMENT

- To increase the rebound damping (make the suspension stiffer), turn the adjuster ① in. The maximum setting (the suspension will be at its stiffest) is 14 clicks in.

COMPRESSION DAMPING FORCE ADJUSTMENT

- To increase the compression damping (make the suspension stiffer), turn the adjuster ② in. The maximum setting (the suspension will be at its stiffest) is 18 clicks in.

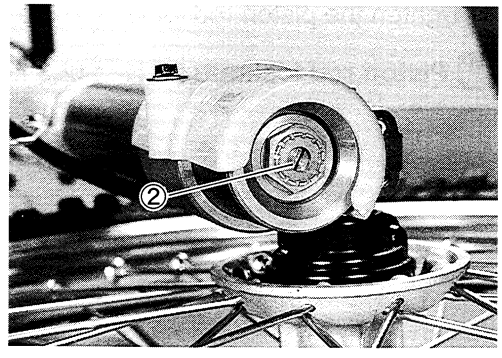

STEERING

CONSTRUCTION

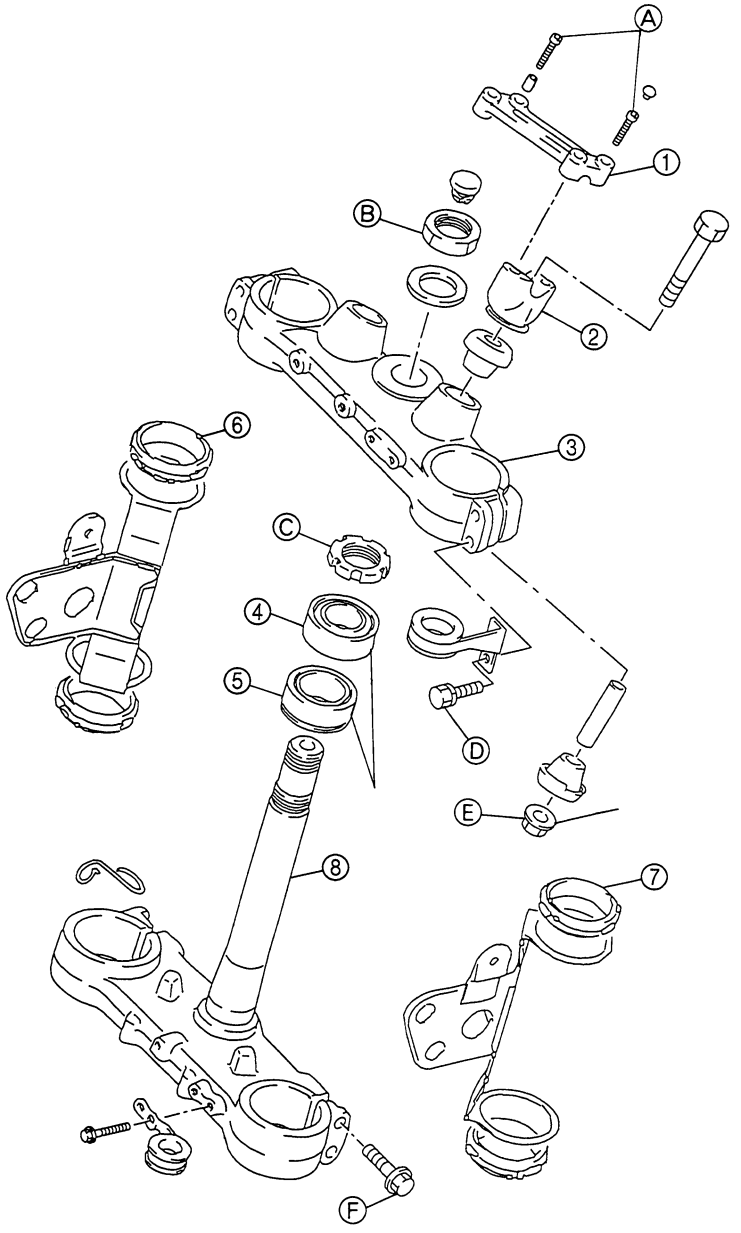

① Handlebar clamp
② Handlebar holder
③ Steering stem upper bracket
④ Bearing (upper)
⑤ Bearing (lower)
⑥ Headlight cover bracket (R)
⑦ Headlight cover bracket (L)
⑧ Steering stem.

Ⓐ Handlebar clamp bolts
Ⓑ Steering stem head nut
Ⓒ Steering stem nut
Ⓓ Front fork upper clamp bolts
Ⓔ Handlebar holder nuts
Ⓕ Front fork lower clamp bolts

ITEM	N·m	kg-m	lb-ft
Ⓐ	26	2.6	19.0
Ⓑ	90	9.0	65.0
Ⓒ	45	4.5	32.5
Ⓓ	26	2.6	19.0
Ⓔ	45	4.5	32.5
Ⓕ	26	2.6	19.0

REMOVAL AND DISASSEMBLY

- Remove the front wheel. (See p. 6-4.)
- Remove the front fork. (See p. 6-10.)
- Remove the headlight cover screw ①.
- Disconnect the headlight coupler ②.
- Remove the headlight assembly.

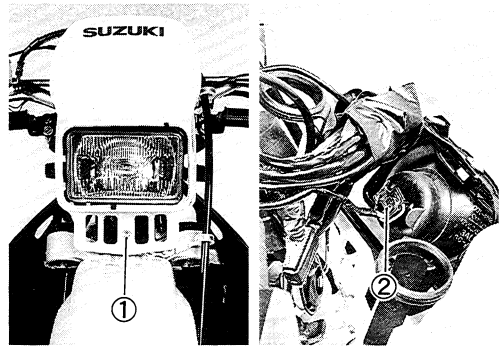

- Remove the lead wire cover ①.
- Disconnect each lead wire and coupler.

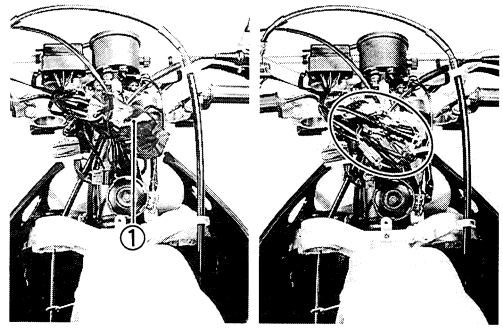

- Disconnect the speedometer cable ②.
- Remove the speedometer ③, headlight relay ④, and condenser ⑤.

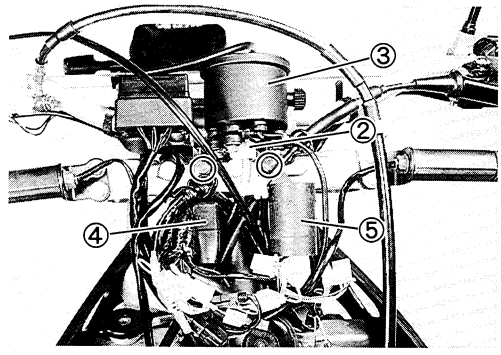

- Remove the front fender.

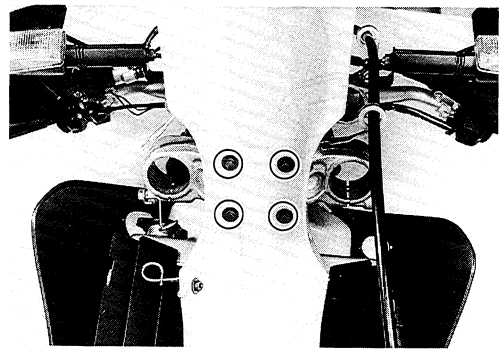

- Remove the brake hose cable guides and turn signal lights ⑥, and horn ⑦.
- Remove the handlebar holder nuts ⑧.
- Remove the handlebar assembly.

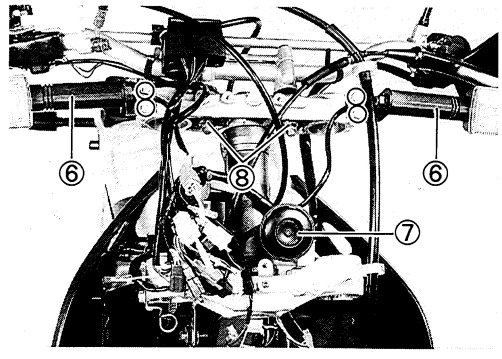

- Remove the steering stem upper bracket ⑨.

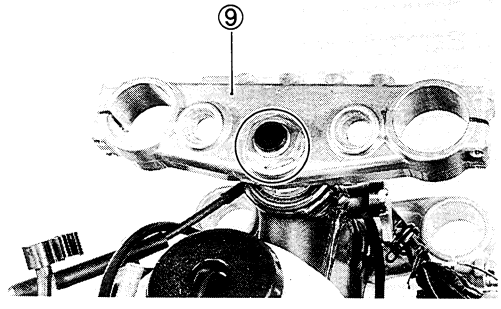

- Remove the steering stem nut using the special tool.

TOOL 09940-14911: Steering stem nut socket wrench
09940-14960: Steering stem nut socket

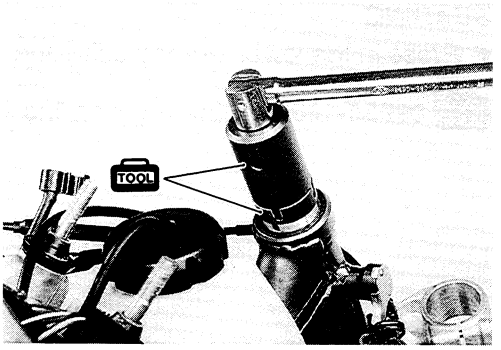

- Remove the steering stem lower bracket.

NOTE:
Hold the steering stem bracket to prevent it from falling.

INSPECTION AND DISASSEMBLY

Inspect the removed parts for the following abnormalities.
* Handlebar distortion
* Race wear and brinelling
* Bearing wear or damage
* Abnormal bearing noise
* Distortion of the steering stem

- Remove the steering stem lower bearing using the special tool.

TOOL 09941-84510: Steering bearing remover

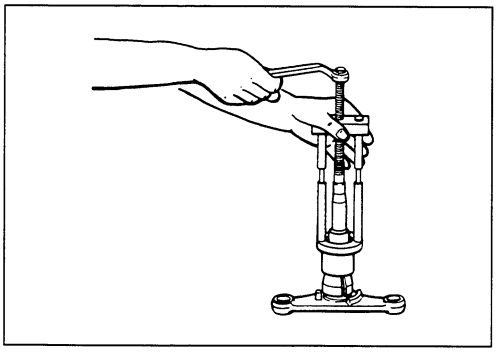

⚠ CAUTION

The removed bearing and race should be replaced with a new one.

- Drive out the steering stem upper and lower bearing outer races using the special tools.

TOOL 09941-54911: Bearing outer race remover
09941-74910: Steering bearing installer

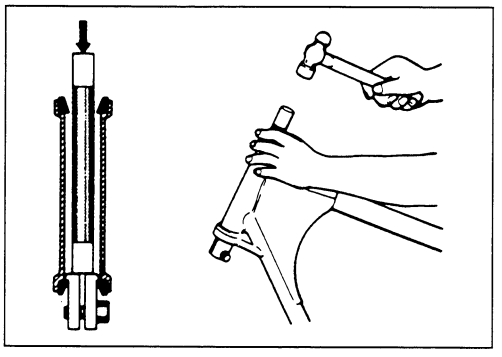

REASSEMBLY AND REMOUNTING

Reassemble and remount the steering stem in the reverse order of removal and disassembly. Pay attention to the following points:

OUTER RACES

- Press in the upper and lower outer races with the special tool.

TOOL 09941-34513: Steering outer race installer
09924-84510: Steering bearing installer

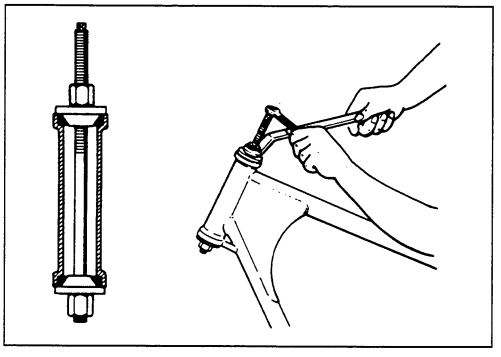

BEARING

- Press in the lower bearing using the special tool.

TOOL 09925-18010: Steering bearing installer

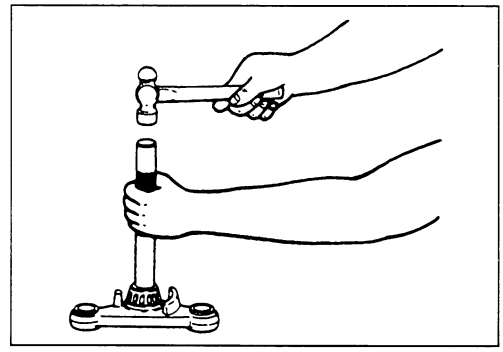

- Apply SUZUKI SUPER GREASE "A" to the upper and lower tapered roller bearings before remounting the steering stem.

99000-25010: SUZUKI SUPER GREASE "A"

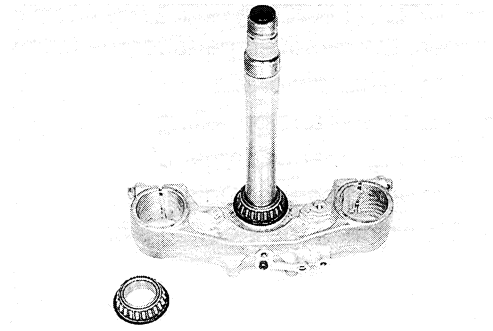

STEERING STEM NUT

- Tighten the steering stem nut to the specified torque using the special tools.

TOOL 09940-14911: Steering stem nut socket wrench
09940-14960: Steering stem nut socket

Steering stem nut: 45 N·m (4.5 kg-m, 32.5 lb-ft)

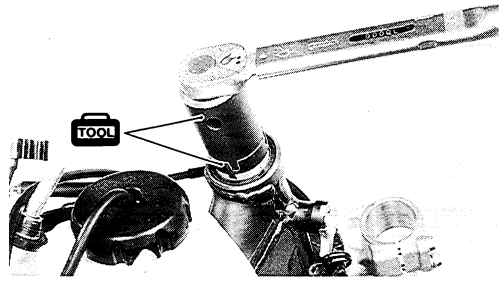

- Turn the steering stem lower bracket about five or six times to the left and right so the tapered roller bearings seat properly.
- Turn back the steering stem nut 1/4–1/2 of a turn.

NOTE:
This adjustment will vary from motorcycle to motorcycle.

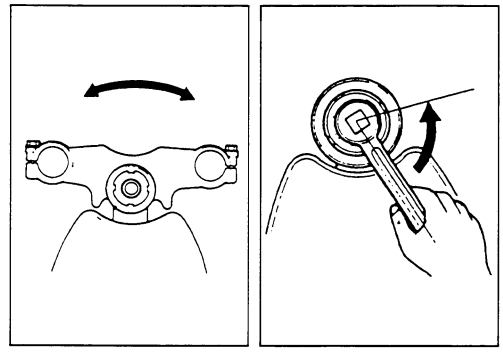

- Install the front forks temporarily.
- Tighten the steering stem head nut to the specified torque.

Steering stem head nut: 90 N·m (9.0 kg-m, 65.0 lb-ft)

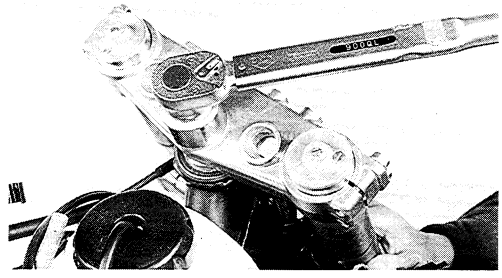

HANDLEBAR ASSEMBLY

- Apply THREAD LOCK SUPER "1322" to the handlebar holder nuts ①, then tighten them to the specified torque.

99000-32110: THREAD LOCK SUPER "1322"

Handlebar holder nuts: 45 N·m (4.5 kg-m, 32.5 lb-ft)

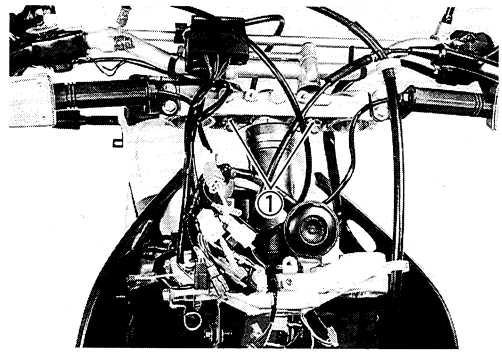

- Install each cable, lead wire coupler, and brake hose. (See pp. 8-9 and 8-10.)
- Install the front fork. (See p. 6-15.)
- Install the front wheel. (See p. 6-8.)

NOTE:
Hold the front fork legs, move them back and forth and make sure that the steering is not loose.

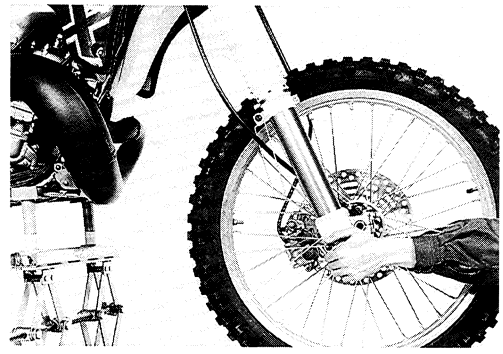

REAR WHEEL

CONSTRUCTION

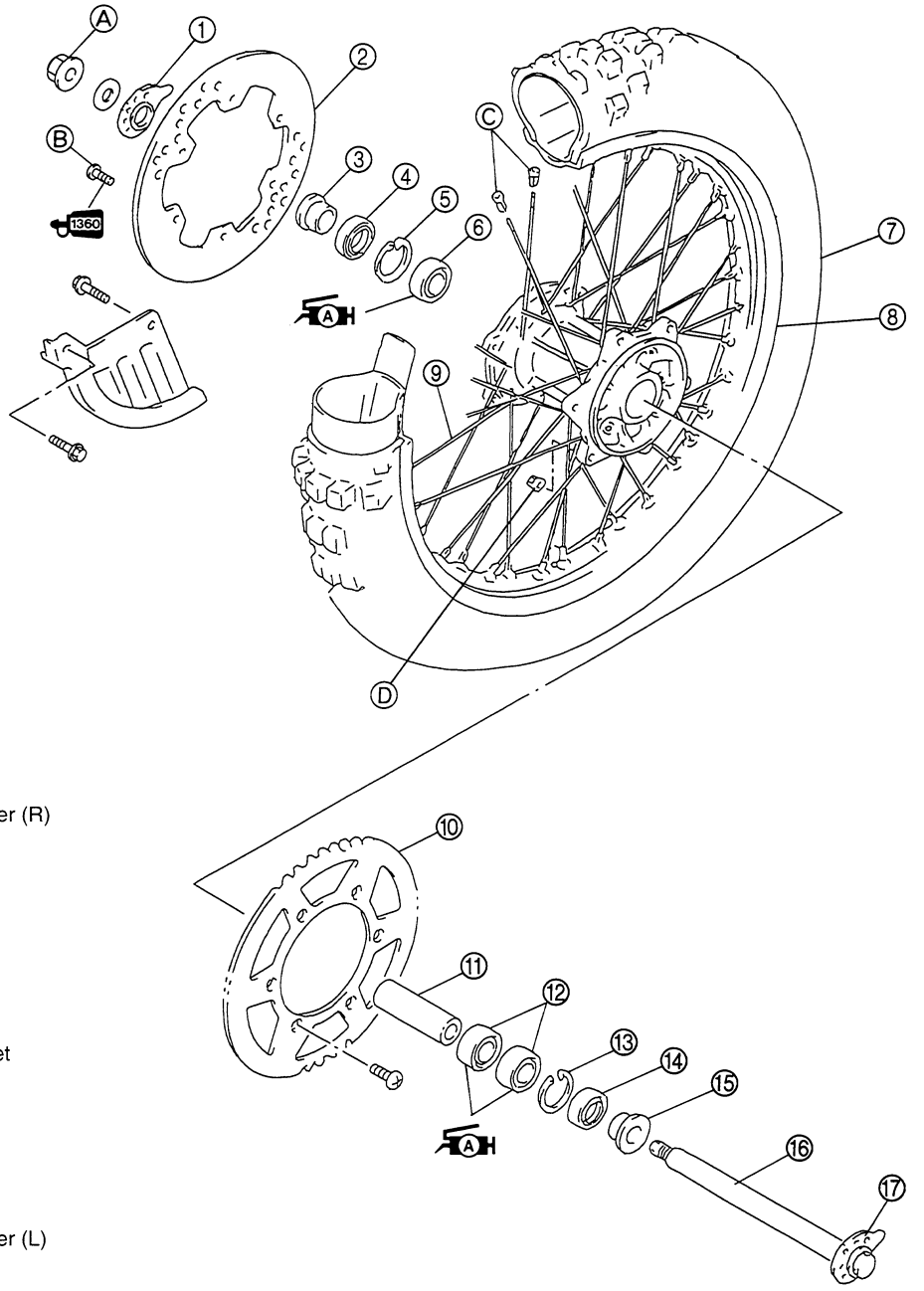

① Chain adjuster (R)
② Brake disc
③ Collar (R)
④ Oil Seal (R)
⑤ Circlip (R)
⑥ Bearing (R)
⑦ TIre
⑧ Rim
⑨ Spokes
⑩ Rear sprocket
⑪ Spacer
⑫ Bearings (L)
⑬ Circlip (L)
⑭ Oil seal (L)
⑮ Collar (L)
⑯ Rear axle
⑰ Chain adjuster (L)

ITEM	N·m	kg-m	lb-ft
Ⓐ	110	11.0	79.5
Ⓑ	10	1.0	7.0
Ⓒ	2.5	0.25	2.0
Ⓓ	28	2.8	20.0

Ⓐ Rear axle nut
Ⓑ Brake disk bolts
Ⓒ Spoke nipples
Ⓓ Rear sprocket nuts

REMOVAL

- Loosen the axle nut ①.
- Support the motorcycle with a jack.
- Remove the axle nut, washer, and chain adjuster ②.

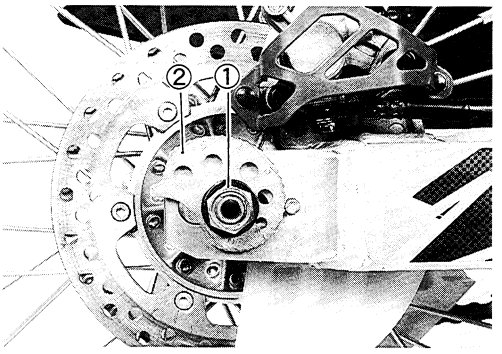

- Remove the chain case.
- Remove the rear axle and disengage the drive chain from the rear sprocket.
- Remove the rear wheel.

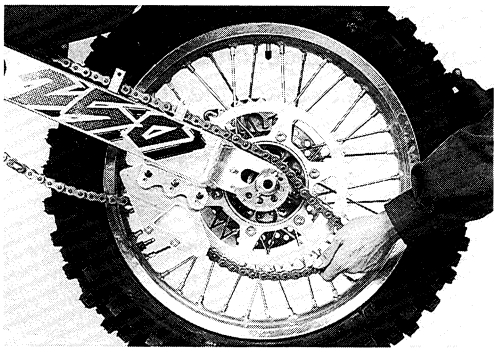

⚠ CAUTION

Do not operate the brake pedal during or after rear wheel removal.

- Remove the right and left spacers.
- Remove the brake disc ③.

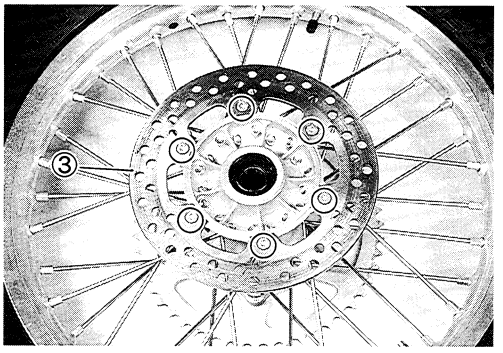

- Remove the rear sprocket ④.

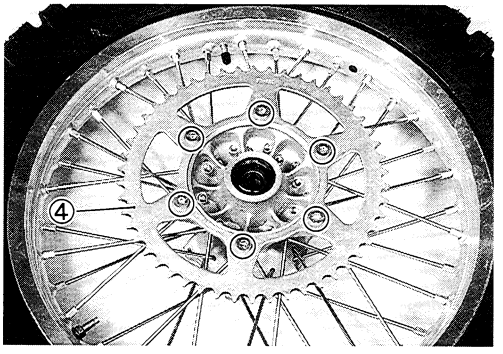

- Remove the right and left oil seals ⑤ and circlips ⑥.

⚠ CAUTION

The removed oil seal must be replaced with a new one.

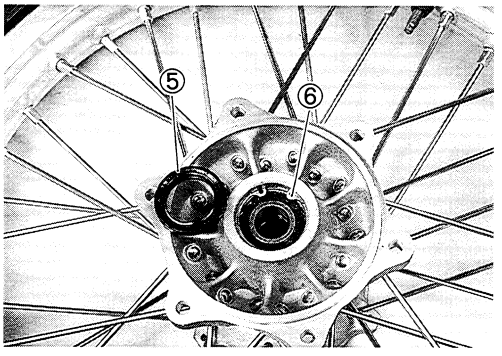

INSPECTION AND DISASSEMBLY

REAR WHEEL ..... **(See p. 6-5.)**
WHEEL BEARING ..... **(See p. 6-6.)**
(Use the front wheel specifications and procedure.)

REAR AXLE

Using a dial gauge, measure the rear axle runout.
If the runout exceeds the limit, replace the rear axle.

Service Limit: 0.25 mm (0.010 in)

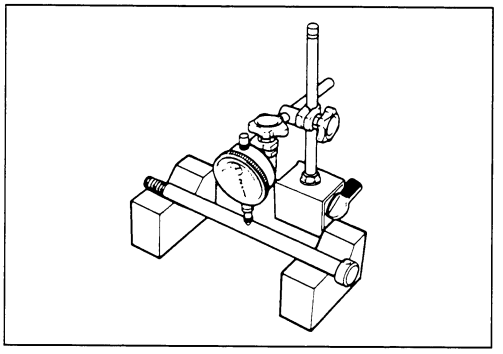

SPROCKET

Inspect the sprocket teeth for wear. If they are worn, replace the sprockets and drive chain as a set.

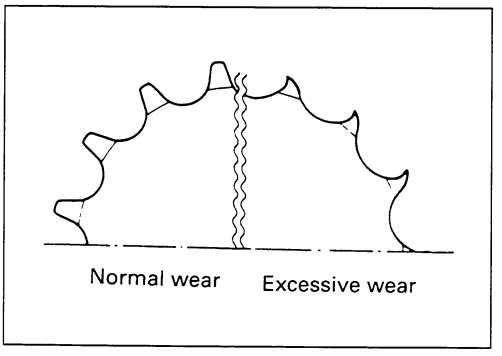

REASSEMBLY AND REMOUNTING

Reassemble and remount the rear wheel in the reverse order of removal and disassembly. Pay attention to the following points:

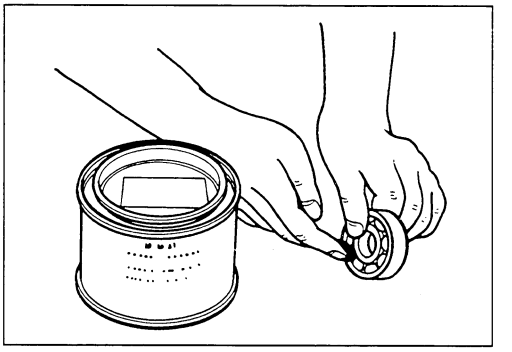

WHEEL BEARING

- Apply SUZUKI SUPER GREASE "A" to the bearings before installing.

99000-25010: SUZUKI SUPER GREASE "A"

- Install the wheel bearings using the special tool.

09924-84521: Steering outer race installer

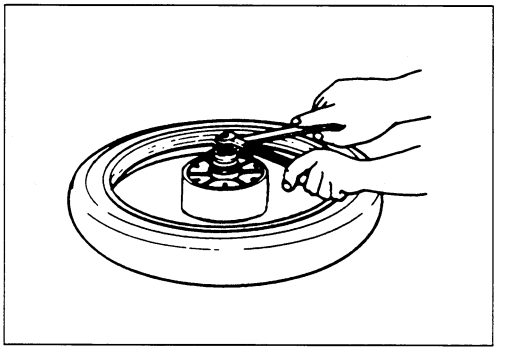

NOTE:
First install the right wheel bearing, then install the left wheel bearings. The sealed cover on the bearing must face out. Refer to the figure below.

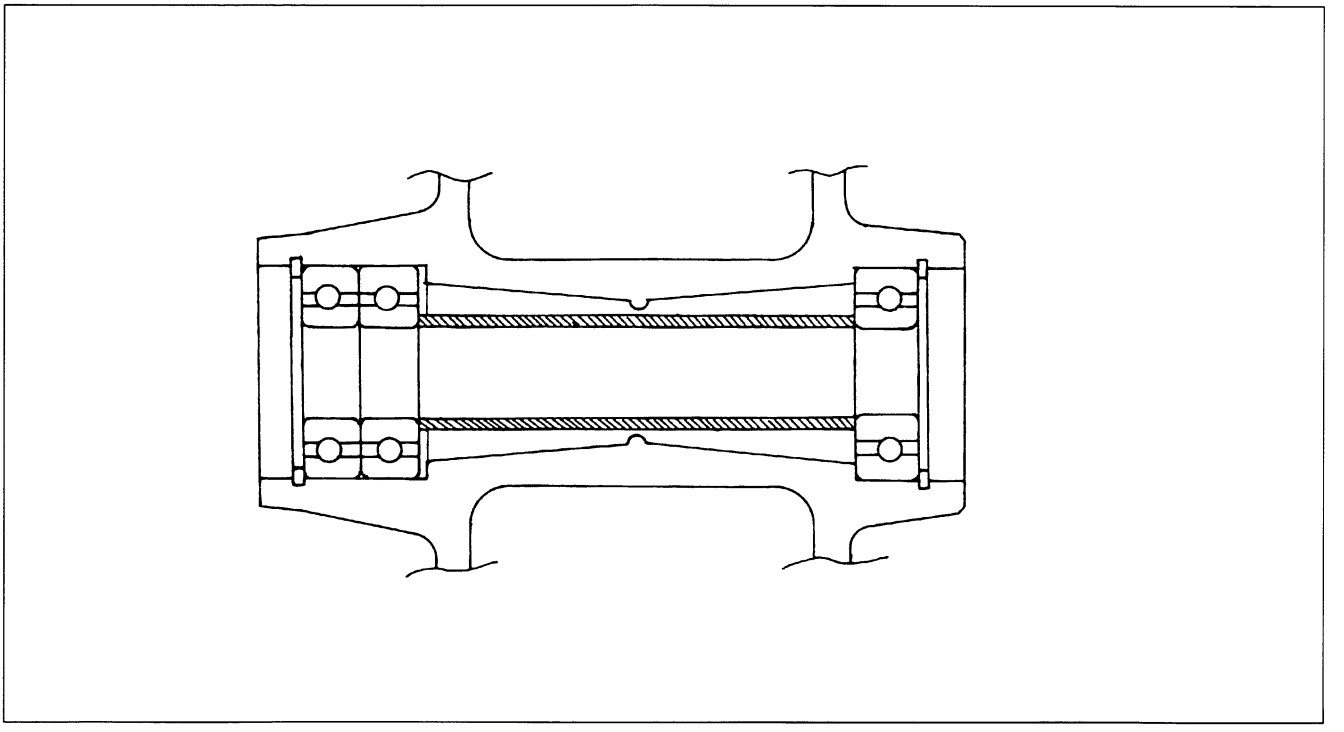

REAR SPROCKET

- Tighten the sprocket mounting nuts to the specified torque.

Rear sprocket nut: 28 N·m (2.8 kg-m, 20.0 lb-ft)

NOTE:
The stamped mark ① on the sprocket must face out.

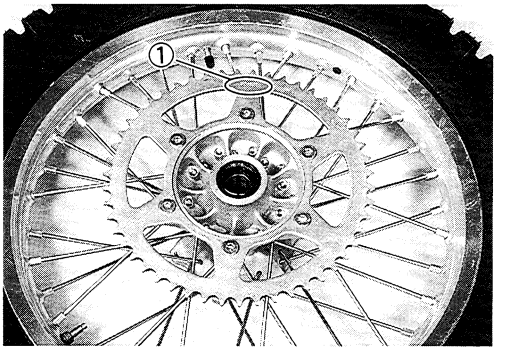

BRAKE DISC

- Make sure that the brake disc is clean and free of any grease. Apply THREAD LOCK SUPER "1360" to the disc mounting bolts and tighten them to the specified torque.

99000-32130: THREAD LOCK SUPER "1360"

Brake disc bolt: 10 N·m (1.0 kg-m, 7.0 lb-ft)

NOTE:
The stamped mark ① on the brake disc must face out.

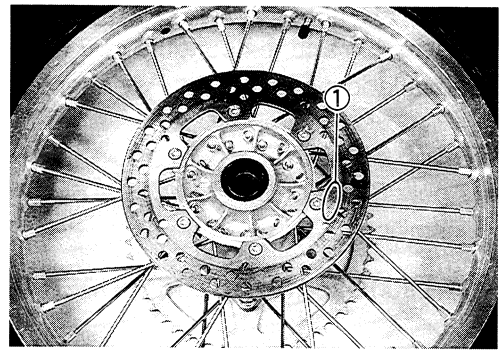

REAR AXLE

- Adjust the drive chain slack after installing the rear wheel. (See p. 2-10.)
- Tighten the rear axle nut ② to the specified torque.

Rear axle nut: 110 N·m (11.0 kg-m, 79.5 lb-ft)

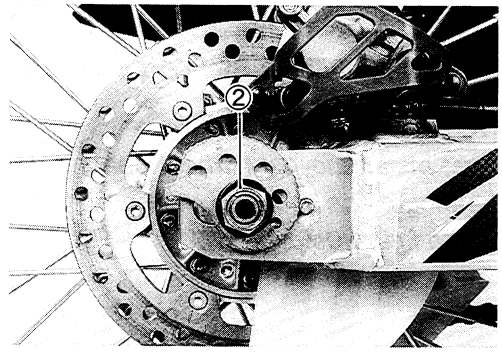

REAR SUSPENSION

CONSTRUCTION

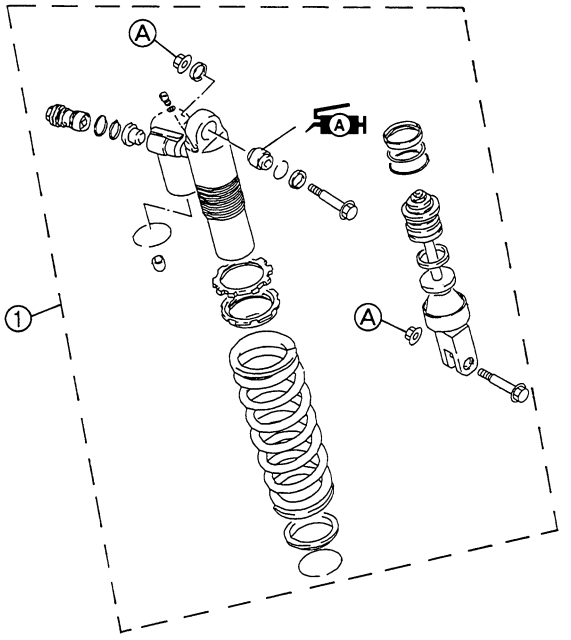

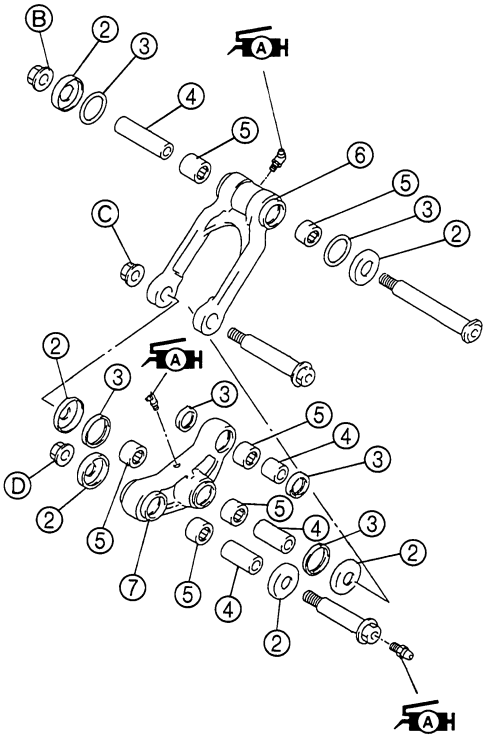

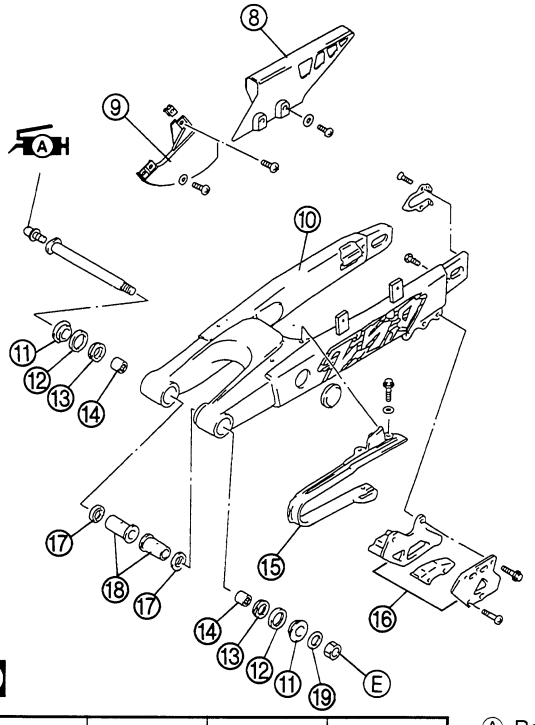

① Rear shock absorber assembly
② Dust seal
③ Washer
④ Spacer
⑤ Bearing
⑥ Cushion rod
⑦ Cushion lever
⑧ Chain case
⑨ Disc cover
⑩ Swingarm
⑪ Collar
⑫ Dust seal
⑬ Washer
⑭ Bearing
⑮ Chain buffer
⑯ Chain guide
⑰ Dust seal
⑱ Collar
⑲ Washer

ITEM	N·m	kg-m	lb-ft
Ⓐ	55	5.5	40.0
Ⓑ	100	10.0	72.5
Ⓒ	100	10.0	72.5
Ⓓ	80	8.0	58.0
Ⓔ	79	7.9	57.0

Ⓐ Rear shock absorber mounting nuts (upper and lower)
Ⓑ Cushion rod mounting nut
Ⓒ Cushion lever mounting nut (center)
Ⓓ Cushion lever mounting nut (front)
Ⓔ Pivot shaft nut

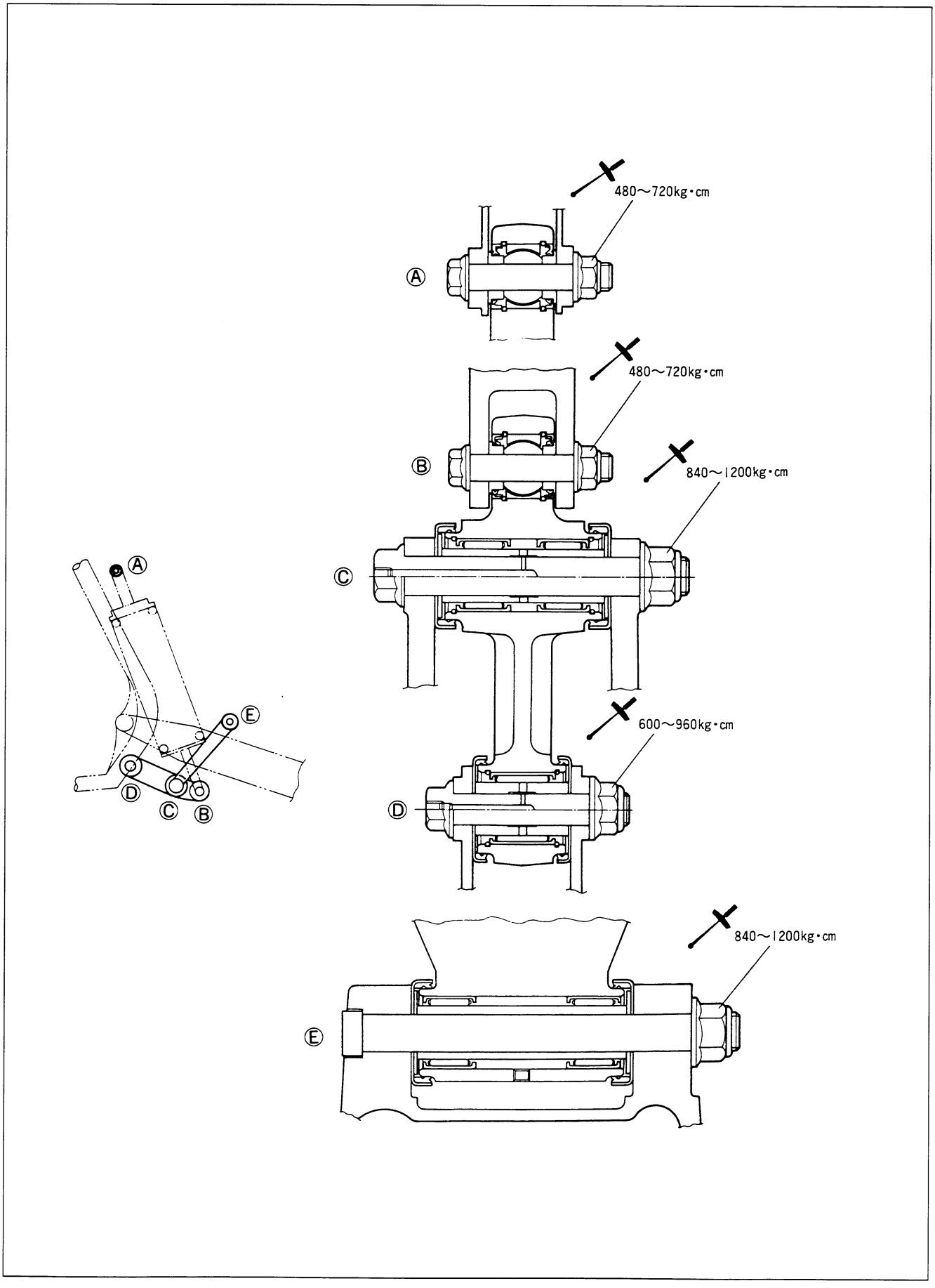
480～720kg・cm
Ⓐ
480～720kg・cm
Ⓑ
840～1200kg・cm
Ⓒ
600～960kg・cm
Ⓓ
840～1200kg・cm
Ⓔ
Ⓐ
Ⓔ
Ⓓ
Ⓒ
Ⓑ

REMOVAL

- Remove the seat and frame cover. (See p. 6-2.)
- Remove the rear wheel. (See p. 6-22.)
- Remove the rear brake caliper. (See p. 6-39.)
- Remove the chain guide ①.

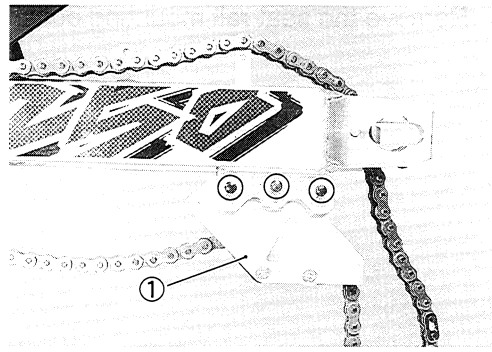

- Remove the clamps and disconnect the rear brake light coupler ② and rear turn signal light couplers ③.

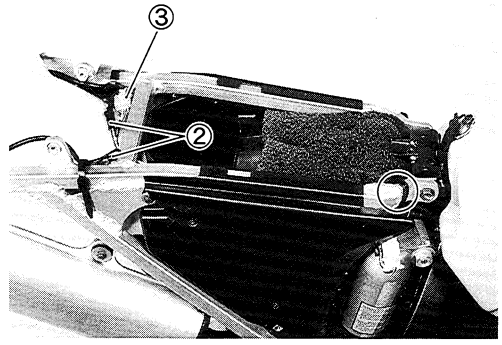

- Remove the clamp and disconnect the side-stand switch coupler ④.

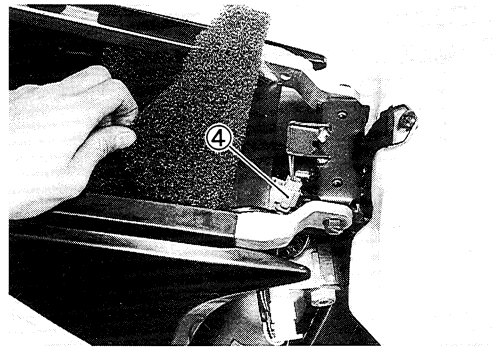

- Loosen the carburetor clamps on the air cleaner side.

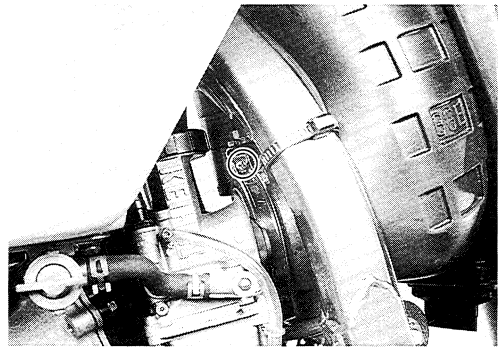

- Remove the muffler mounting bolts.

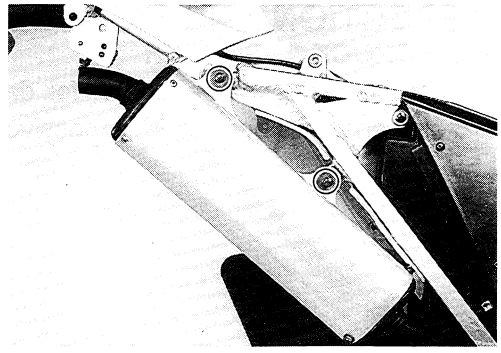

- Remove the seat rail mounting bolts.

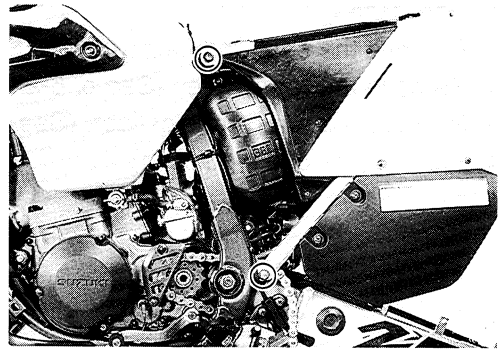

- Remove the rear shock absorber ①.
- Remove the brake hose ②.

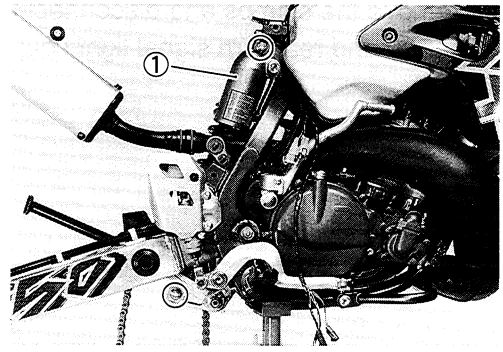

- Remove the cushion rod ③.
- Remove the swingarm pivot nut ④.

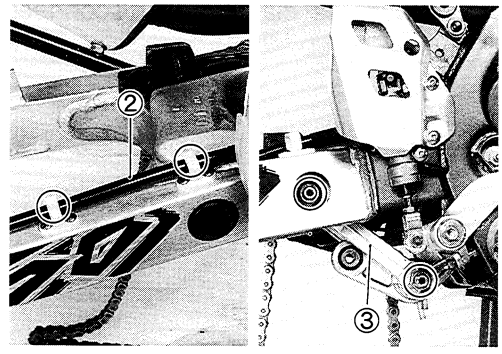

- Remove the cushion lever ⑤.

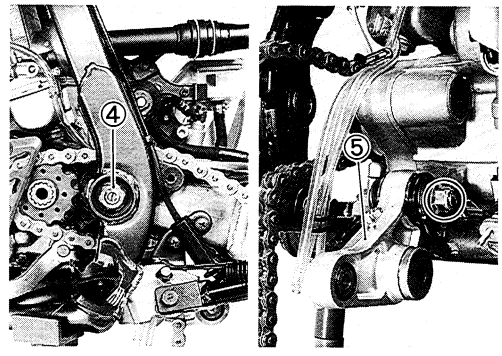

INSPECTION AND DISASSEMBLY

REAR SHOCK ABSORBER

Inspect the rear shock absorber for damage and oil leakage, and also check its bearing for excessive play.

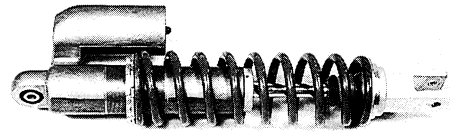

- Loosen the locknut and spring adjuster using the special tool.

TOOL 09910-60611: Universal clamp wrench

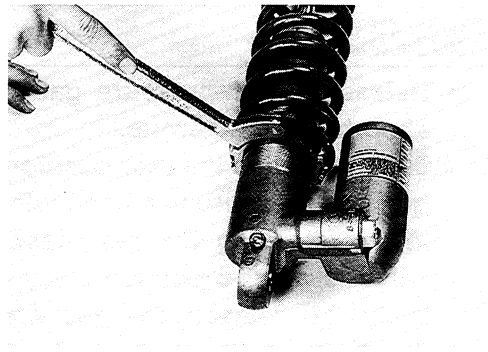

- Lift the spring retainer ① off of the spring and then remove it along with the C-ring ②.

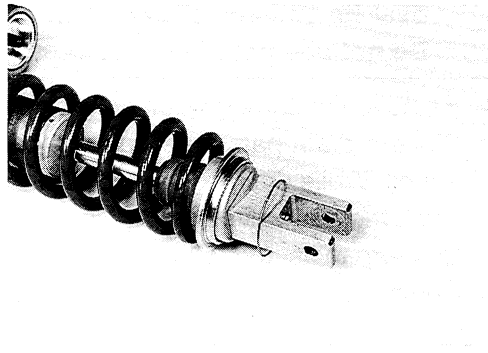

- Install the spring.

NOTE:
The end of the spring with the smaller inside diameter must be at the bottom of the rear shock absorber.

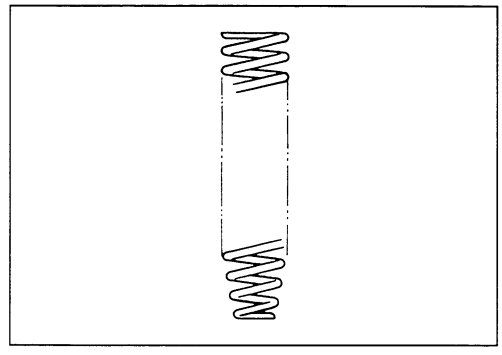

REAR SHOCK ABSORBER OIL REPLACEMENT

Tools and Equipment

- The following tools and equipment are required when changing the rear shock absorber oil.

① Screwdriver or small punch
② Vise
③ Drain pan
④ Oil can
⑤ Beaker
⑥ SUZUKI rear suspension oil (SS-25)
⑦ Rags
⑧ Nitrogen gas tank
⑨ Filler Hose and nozzle
⑩ Regulator assembly
⑪ Owner's service manual

- Remove the gas valve cap. Push the gas valve core with a screwdriver and bleed the nitrogen gas.

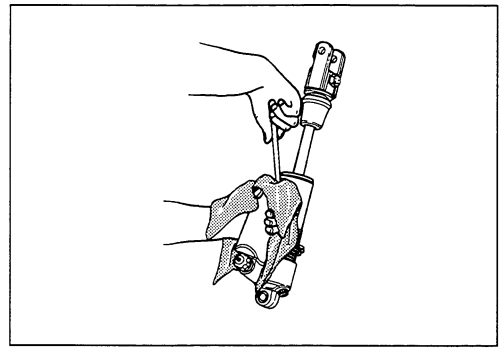

⚠ WARNING

* **Releasing high-pressure gas from the rear shock absorber is dangerous.**
* **Do not service the rear cushion unit until the nitrogen gas pressure has been released.**
  When releasing the gas pressure, make sure the valve is always pointed away from your face and body. To release the gas pressure, use a thin, pointed tool (e.g., screwdriver, punch) with a rag over its end and press down on the gas valve core. Do not use your finger to press the core.

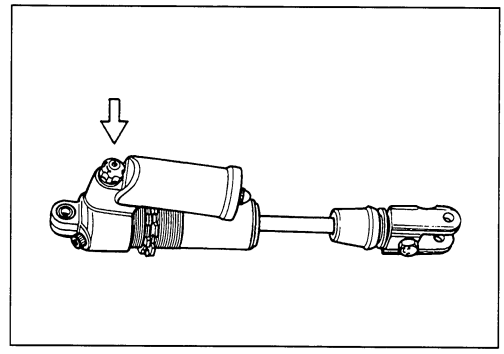

- Remove the compression adjuster assembly.
- Place a drain pan under the rear shock absorber and drain the oil. While draining the oil, slowly pump the rod.
- Push the gas valve core again to allow the reservoir bladder to return to its normal condition.
- Pump the rod again and drain the remaining oil.

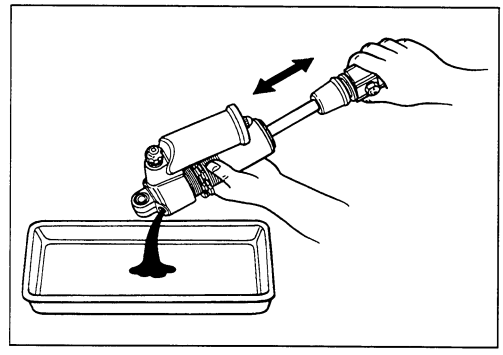

- Tilt the rear shock absorber as shown and add new rear suspension oil into the reservoir.

Oil type: SUZUKI REAR SUSPENSION OIL SS-25 or equivalent.
Oil capacity: 345 ml (11.7/12.1 US/Imp oz)

NOTE:
Be sure to fully extend the rod after adding the rear suspension oil.

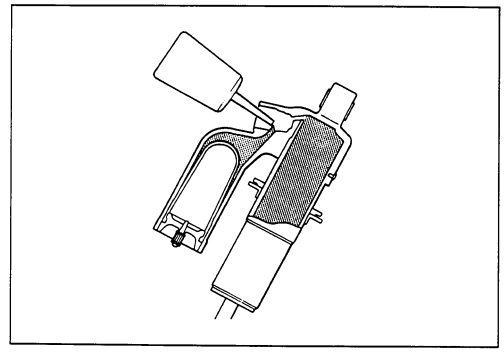

- Reassemble the compression adjuster assembly.

- Clamp the rear shock absorber in a vise with soft jaws and loosen the bleed bolt.
- Inflate the reservoir bladder by slowly pressurizing the reservoir with 50 kPa (0.5 kg/cm^2, 7 psi) of air.
- Bleed the reservoir of any air.

Air bleed bolt: 8 N·m (0.8 kg-m, 6.0 lb-ft)

- Pressurize the rear cushion unit with 1000 kPa (10 kg/cm^2, 142 psi) of nitrogen gas.

⚠ WARNING

* **Using flammable gas (e.g., oxygen used for welding) to pressurize the rear cushion unit is extremely hazardous and can cause a fire.**
* **Only use nitrogen gas when refilling the rear cushion unit. However, if nitrogen gas is not available, use compressed air which does not contain water.**

⚠ WARNING

- **Over-pressurizing the rear cushion unit may rupture it.**
- **Be sure to pressurize the rear cushion unit specification.**

⚠ CAUTION

The rear cushion unit's gas pressure must be set to the proper specification or the following will result:
- **The unit will be damaged when the motorcycle is ridden.**
- **The unit will not operate properly.**
- **The unit may leak oil if the gas pressure is too low.**

- Install the gas valve cap.

DUST SEALS AND SPACERS

- Remove the dust seals, washers, and spacers from the swingarm, and cushion lever, and cushion rod.
- Inspect the spacers for any flaws or other damages. If any defects are found, replace the spacers with new ones.

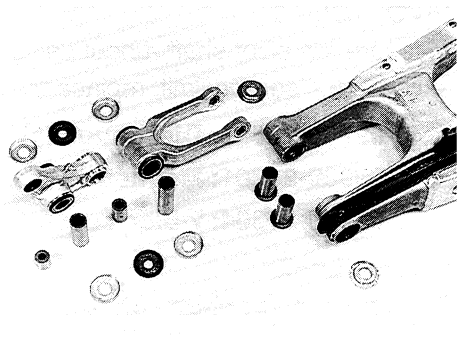

SWINGARM BEARINGS

Insert the spacers into the bearings, move the spacer up and down and check for any play.
If there is excessive play, replace the bearing(-s) with a new one.

- Remove the bearings and spacer using the special tools.

TOOL 09923-74510: Bearing remover
09930-30102: Sliding shaft

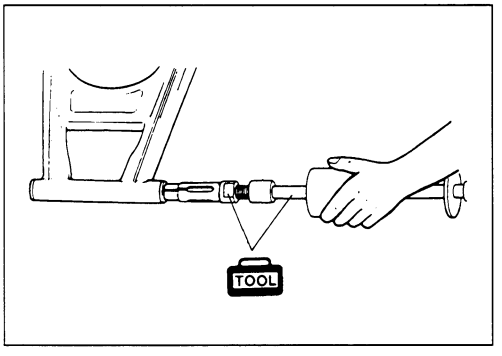

⚠ CAUTION

The removed bearings must be replaced with new ones.

SWINGARM

Inspect the swingarm for damages.

CUSHION LEVER BEARINGS

Insert the spacers into the bearings, move the spacer up and down, and check for any play.

If there is excessive play, replace the bearing(-s) with a new one.

- Remove the cushion lever needle bearings using the special tools.

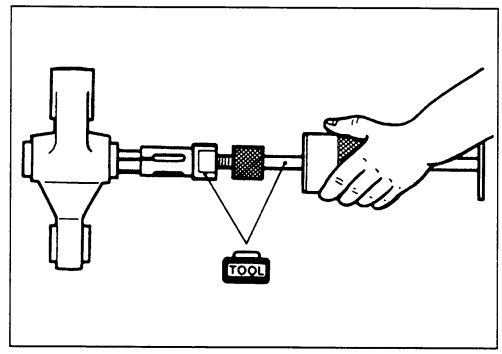

TOOL 09923-74510: Bearing remover
09930-30102: Sliding shaft

CUSHION LEVER AND CUSHION RODS

Inspect the cushion lever and cushion rods for damage.

PIVOT SHAFT

Measure the pivot shaft runout using the dial gauge. If the runout exceeds the service limit, replace the pivot shaft.

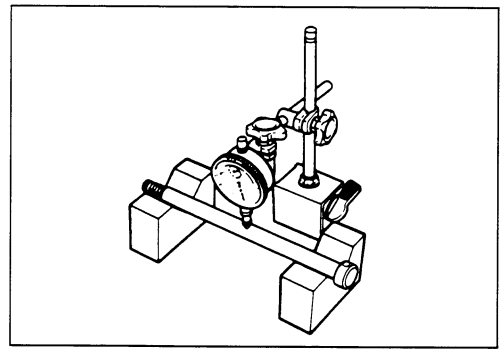

TOOL 09900-20606: Dial gauge (1/100 mm)
09900-20701: Magnetic stand
09900-21304: V-block set (100 mm)

Service Limit
Swingarm pivot shaft runout: 0.3 mm (0.01 in)

REASSEMBLY

SWINGARM BEARINGS

- Before installing the bearings, install the spacer.
- Press the bearings into the swingarm pivot using the special tool.

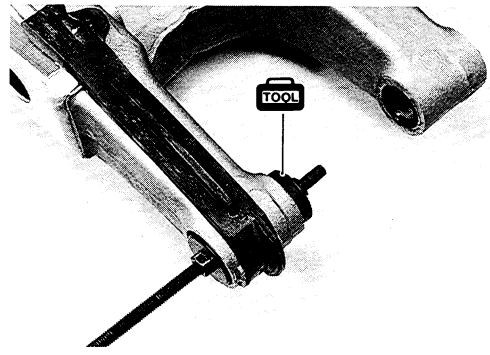

TOOL 09924-84521: Bearing installer

- Apply SUZUKI SUPER GREASE "A" to the bearings.

99000-25010: SUZUKI SUPER GREASE "A"

CUSHION LEVER AND CUSHION ROD BEARINGS

- Press the bearings into the cushion lever using the special tools.

TOOL 09924-84510: Bearing installer
09941-34513: Steering outer race installer

- Apply SUZUKI SUPER GREASE "A" to the bearings.

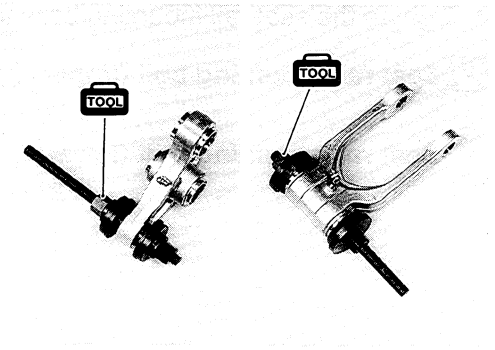

REMOUNTING

Remount the swingarm and rear shock absorber in the reverse order of removal. Pay attention to the following points:

- Tighten each nuts to the specified torque.

Cushion lever front mounting nut ①:
80 N·m (8.0 kg-m, 58.0 lb-ft)
Cushion lever center mounting nut ②:
100 N·m (10.0 kg-m, 72.5 lb-ft)
Pivot shaft nut ③: 79 N·m (7.9 kg-m, 57.0 lb-ft)
Cushion rod mounting nut ④:
100 N·m (10.0 kg-m, 72.5 lb-ft)

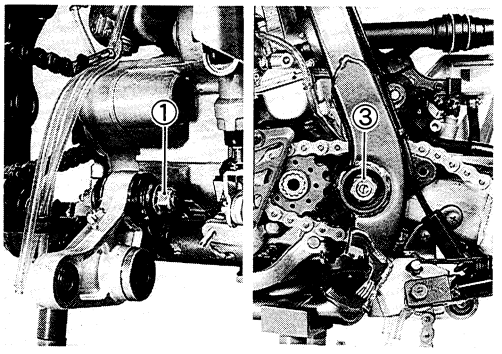

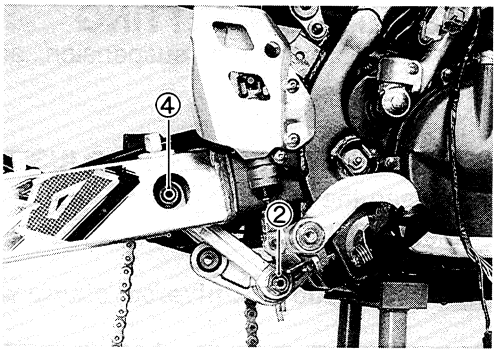

- Tighten the rear shock absorber mounting nuts ⑤ to the specified torque.

Rear shock absorber mounting nuts ⑤:
55 N·m (5.5 kg-m, 40.0 lb-ft)

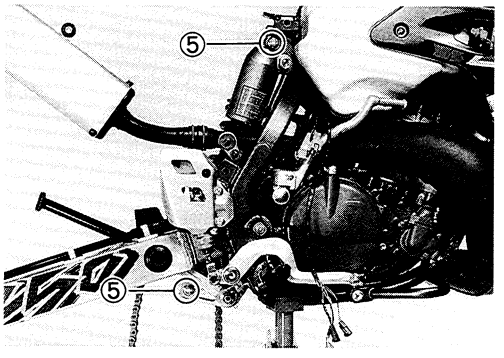

- Tighten the seat rail mounting bolts to the specified torque.

Seat rail mounting bolt (upper) ①:
26 N·m (2.6 kg-m, 19.0 lb-ft)
Seat rail mounting bolt (lower) ②:
23 N·m (2.3 kg-m, 16.5 lb-ft)

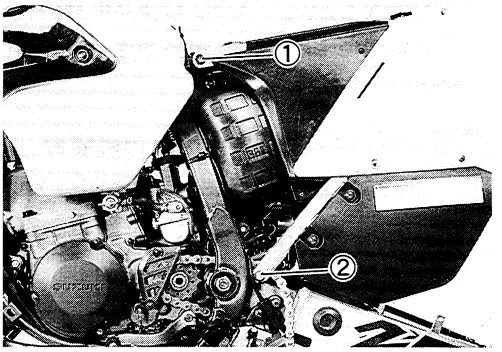

- Install the rear brake caliper. (See p. 6-47.)
- Install the rear wheel. (See p. 6-25.)
- Install the seat. (See p. 6-2.)

FINAL INSPECTION AND ADJUSTMENT

After installing the rear suspension and wheel, the following adjustments are required before driving.

∗ Drive chain (See p. 2-10.)

SUSPENSION SETTING

After installing the rear suspension, adjust the spring pre-set length as follows.

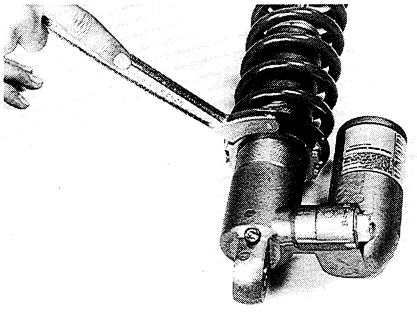

SPRING PRE-SET LENGTH ADJUSTMENT

- Loosen the locknut ① and turn the spring adjuster ② using the special tool.

TOOL 09910-60611: Universal clamp wrench

Rear shock absorber spring pre-set length Ⓐ:
263.8 mm (10.4 in)

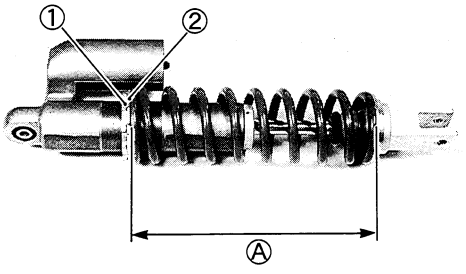

REBOUND DAMPING FORCE ADJUSTMENT

- To increase the rebound damping (make the suspension stiffer), turn the adjuster ① in. The maximum setting (the suspension will be at its stiffest) is 26 clicks in.

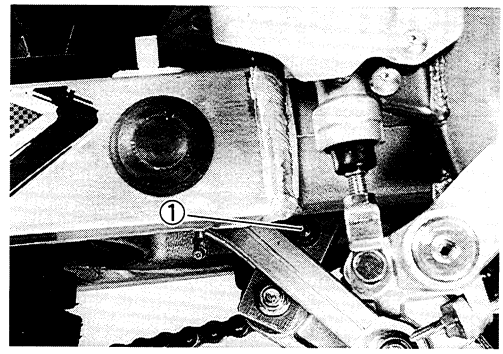

COMPRESSION DAMPING FORCE ADJUSTMENT

- To increase the compression damping (make the suspension stiffer), turn the adjuster ② in. The maximum setting (the suspension will be at its stiffest) is 21 clicks in.

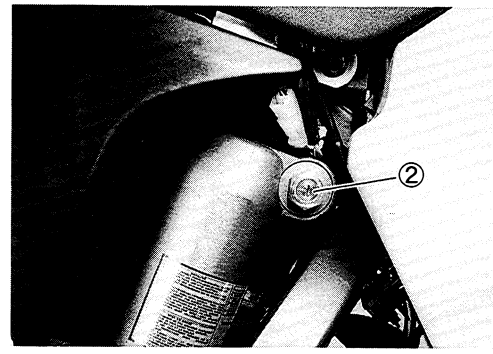

FRONT BRAKE

CONSTRUCTION

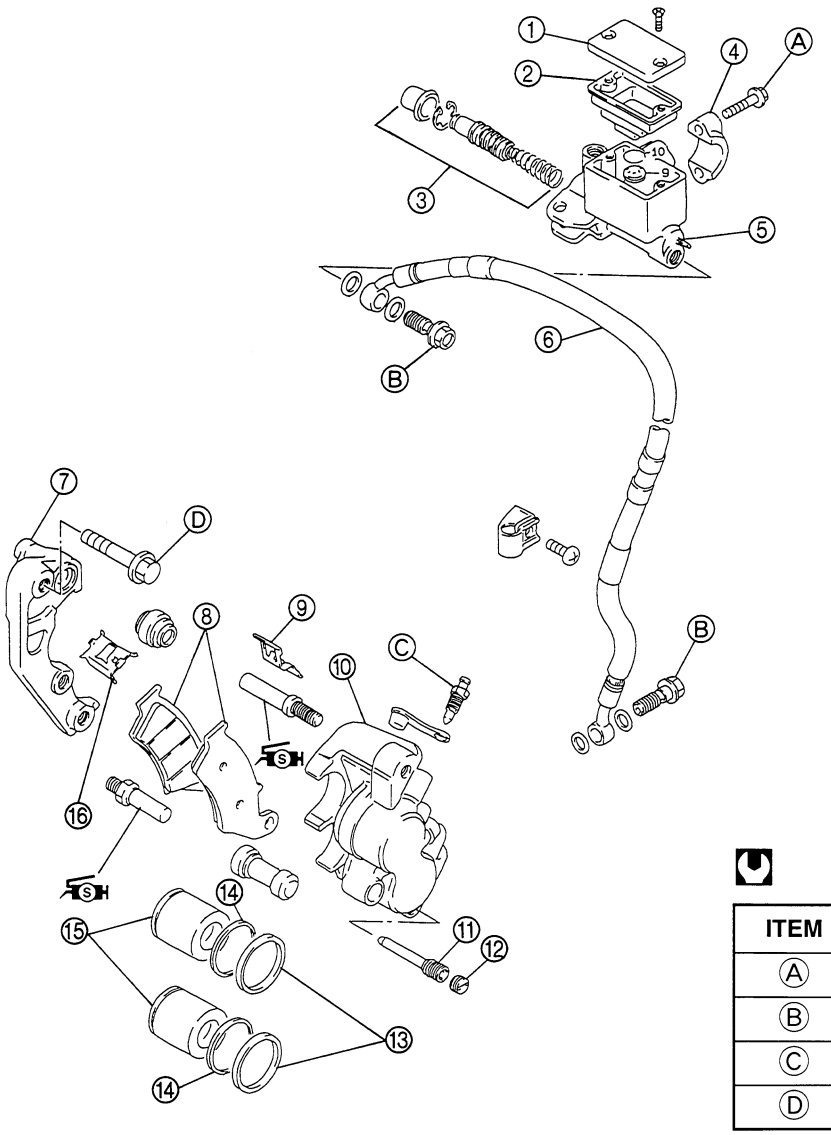

① Master cylinder reservoir cap
② Diaphragm
③ Piston/cup set
④ Master cylinder clamp
⑤ Master cylinder
⑥ Brake hose
⑦ Brake caliper holder
⑧ Brake pads
⑨ Spring
⑩ Brake caliper
⑪ Brake pad pin
⑫ Brake pad pin plug
⑬ Piston seal
⑭ Dust seal
⑮ Brake caliper pistons
⑯ Brake pad guide plate

Ⓐ Master cylinder clamp bolts
Ⓑ Brake hose union bolts
Ⓒ Air bleeder valve
Ⓓ Brake caliper mounting bolts

ITEM	N·m	kg-m	lb-ft
Ⓐ	10	1.0	7.0
Ⓑ	23	2.3	16.5
Ⓒ	8	0.8	6.0
Ⓓ	26	2.6	19.0

⚠ WARNING

- **This brake system is filled with an ethylene glycol-based DOT 4 brake fluid. Do not use or mix different types of fluid, such as silicone-based or petroleum-based brake fluids.**
- **Do not use any brake fluid taken from old, used or unsealed containers. Never reuse brake fluid left over from the last servicing or which has been stored for long periods of time.**
- **When storing brake fluid, seal the container completely and keep it away from children.**
- **When replenishing brake fluid, take care not to get dust into the fluid.**
- **When washing brake components, use new brake fluid. Never use cleaning solvent.**
- **A contaminated brake disc or brake pad reduces braking performance. Discard contaminated pads and clean the disc with high quality brake cleaner or a neutral detergent.**

⚠ CAUTION

Handle brake fluid with care: the fluid reacts chemically with paint, plastics, rubber materials etc.

BRAKE PAD REPLACEMENT

- Remove the disc cover. (See p. 6-4.)
- Remove the brake pads by removing the brake pad pin plug and brake pad pin ①.

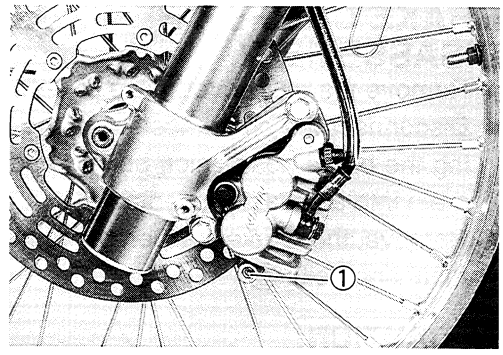

⚠ CAUTION

> *** Do not operate the brake lever during or after brake pad removal.**
> *** Replace the brake pads as a set, otherwise braking performance will be adversely affected.**

- Install the new brake pads.

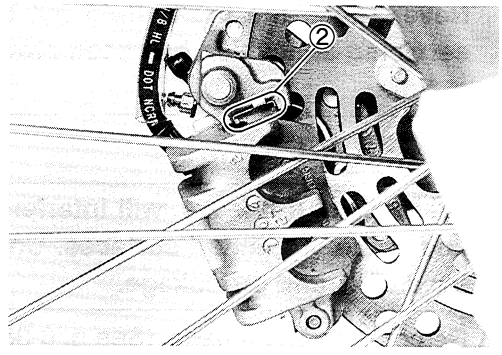

⚠ WARNING

> **Make sure the brake pad is properly engaged with the guide plate ② as shown.**

- Tighten the brake pad pin ① to the specified torque.

Brake pad pin: 18 N·m (1.8 kg-m, 13.0 lb-ft)

NOTE:
After replacing the brake pads, pump the brake lever a few times to check for proper brake operation and then check the brake fluid level.

BRAKE FLUID REPLACEMENT

- Place the motorcycle on a level surface and keep the handlebar straight.
- Remove the master cylinder reservoir cap and diaphragm.
- Suck up the old brake fluid as much as possible.
- Fill the reservoir with new brake fluid.

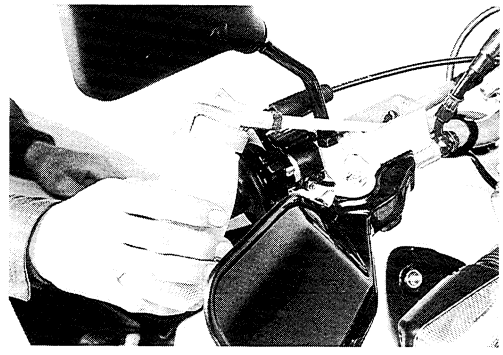

Specification and classification: DOT 4

- Connect a clear hose ① to the air bleeder valve ② and insert the other end of the hose into a receptacle.
- Loosen the air bleeder valve and pump the brake lever until the old brake fluid is completely out of the brake system.
- Close the air bleeder valve and disconnect the clear hose. Fill the reservoir with new brake fluid to the upper end of the inspection window.

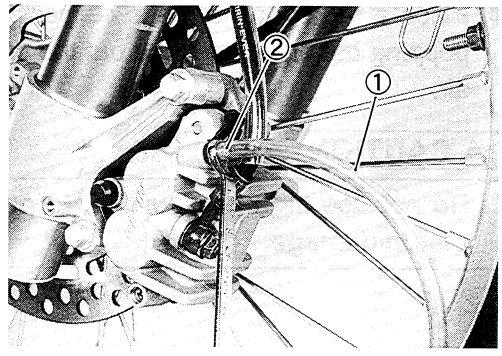

⚠ CAUTION

> **Bleed air from the brake system. (See p. 2-13.)**

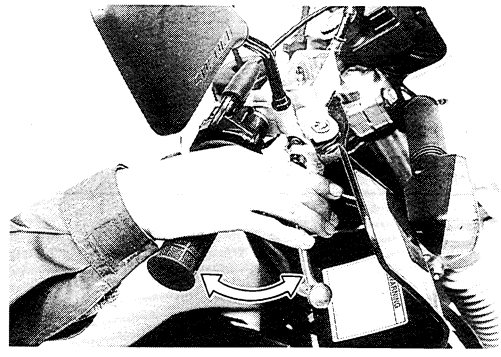

BRAKE CALIPER REMOVAL AND DISASSEMBLY

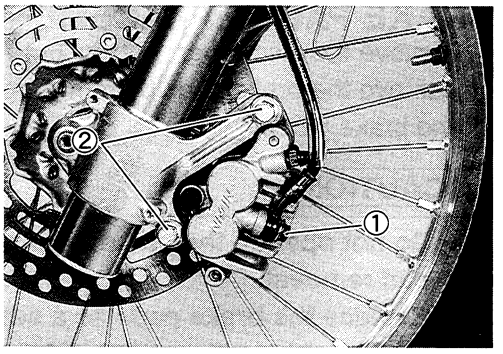

- Remove the disc cover. (See p. 6-4.)
- Disconnect the brake hose from the brake caliper by removing the brake hose union bolt ① and allow the brake fluid to drain into a suitable receptacle.
- Remove the brake caliper by removing the brake caliper mounting bolts ②.

⚠ CAUTION

Never reuse the brake fluid left over from previous servicing and which has been stored for long periods of time.

⚠ WARNING

Brake fluid, if it leaks, will interfere with safe running and discolor painted surfaces. Check the brake hose for cracks and oil leakage.

- Remove the brake pads. (See p. 6-38.)
- Remove the brake caliper holder ③.
- Remove the spring ④.

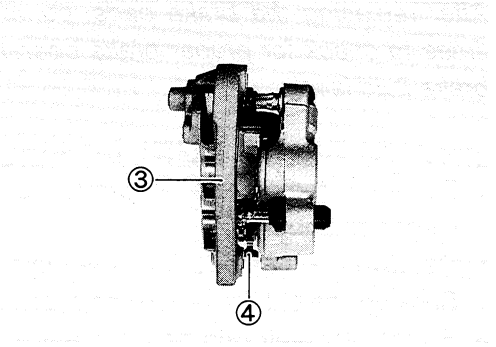

- Place a rag over the brake caliper piston to prevent it from popping out and then force out the piston using compressed air.

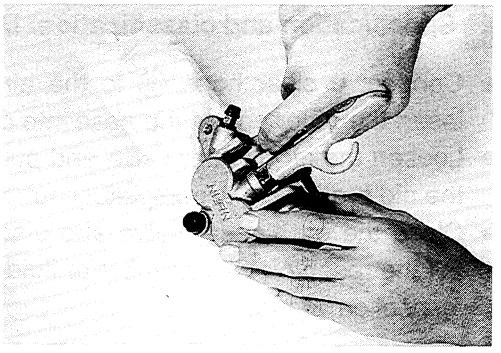

⚠ CAUTION

Do not use high pressure air to prevent brake caliper piston damage.

- Remove the piston seals ⑤ and dust seals ⑥.

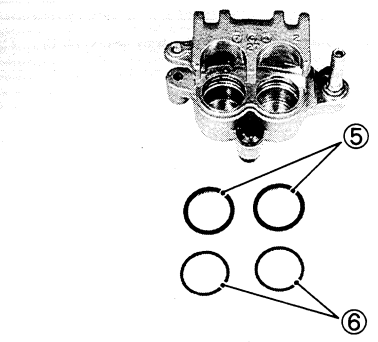

⚠ CAUTION

Do not reuse the piston seals and dust seals to prevent fluid leakage.

BRAKE CALIPER INSPECTION

BRAKE CALIPER

Inspect each brake caliper cylinder wall for nicks, scratches, or other damage.

BRAKE CALIPER PISTONS

Inspect the brake caliper pistons for any scratches or other damage.

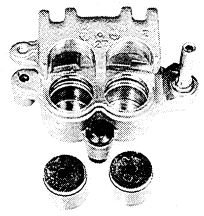

RUBBER PARTS

The removed rubber parts ① should be replaced with new ones.

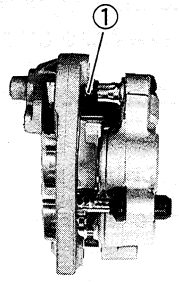

BRAKE CALIPER REASSEMBLY AND REMOUNTING

Reassemble and remount the brake caliper in the reverse order of removal and disassembly. Pay attention to the following points:

- Wash the caliper bores and pistons with the specified brake fluid. Thoroughly wash the dust seal grooves and piston seal grooves.

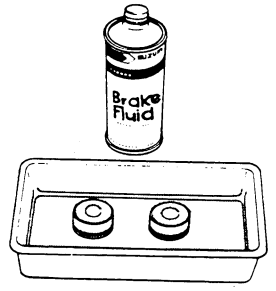

BF Specification and classification: DOT 4

⚠ CAUTION

- **Wash the brake caliper components with new brake fluid before reassembly.**
- **Do not wipe the brake fluid off after washing the components.**
- **When washing the components, use the specified brake fluid. Never use different types of fluid or cleaning solvents such as gasoline, kerosine, etc.**
- **Replace the piston seals and dust seals with new ones.**
- **Apply brake fluid to all of the seals, brake caliper bores, and pistons before reassembly.**

BRAKE CALIPER SLIDE PIN

- Apply SUZUKI SILICON GREASE to the brake caliper slide pins.

99000-25100: SUZUKI SILICONE GREASE

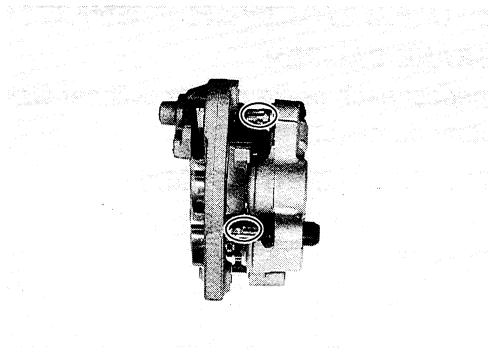

- Tighten the brake caliper mounting bolts ①, brake pad pin ②, and brake hose union bolt ③ to the specified torque.

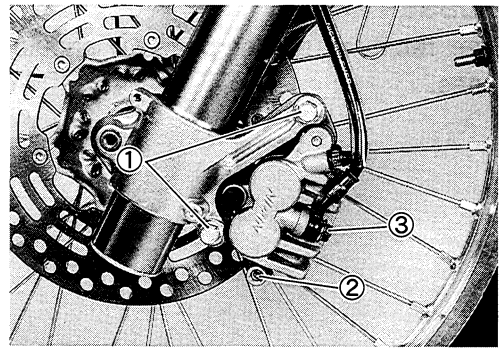

Brake caliper mounting bolt ①:
26 N·m (2.6 kg-m, 19.0 lb-ft)
Brake pad pin ②: 18 N·m (1.8 kg-m, 13.0 lb-ft)
Brake hose union bolt ③: 23 N·m (2.3 kg-m, 16.5 lb-ft)

NOTE:
Before remounting the brake caliper, push the brake caliper pistons all the way into the caliper.

⚠ CAUTION

Bleed air from the system after reassembling the brake caliper. (See p. 2-13.)

BRAKE DISC INSPECTION

- Remove the front and rear wheels. (See pp. 6-4 and 6-22.)

Check the brake disc for damage or cracks. Measure the thickness using the micrometer.
Replace the brake disc if the thickness is less than the service limit or if damage is found.

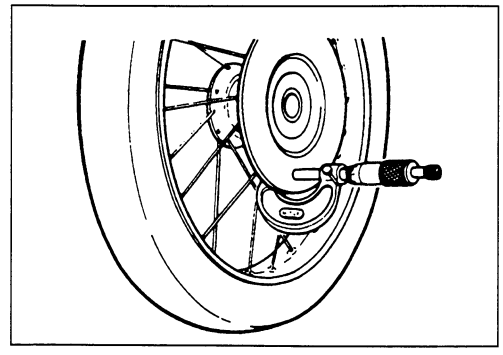

TOOL 09900-20205: Micrometer (0–25 mm)

Service Limit
Brake disc thickness (front): 2.5 mm (0.10 in)
(rear): 4.0 mm (0.16 in)

Measure the runout using the dial gauge.
Replace the disc if the runout exceeds the service limit.

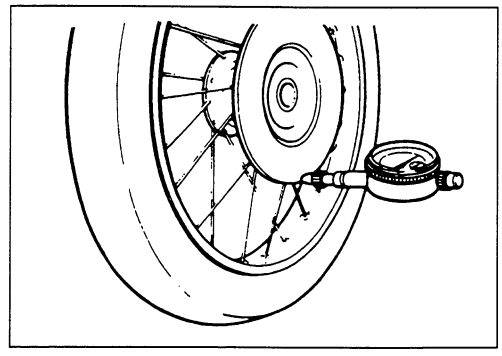

TOOL 09900-20606: Dial gauge (1/100 mm)
09900-20701: Magnetic stand

Service Limit
Brake disc runout (front and rear): 0.3 mm (0.01 in)

MASTER CYLINDER REMOVAL AND DISASSEMBLY

- Place a rag underneath the master cylinder's brake hose union bolt to catch any brake fluid that might spill. Remove the brake hose union bolt and disconnect the brake hose.

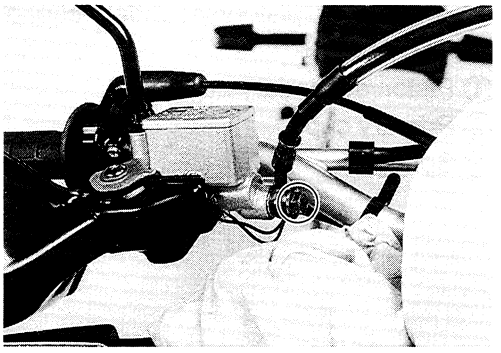

⚠ CAUTION

Immediately wipe off any brake fluid contacting any part of the motorcycle. The brake fluid reacts chemically with paint, plastics and rubber materials, etc., and will damage them severely.

- Disconnect the front brake light switch lead wires ①.
- Remove the right rear view mirror ②.
- Remove the master cylinder assembly clamp bolt ③.

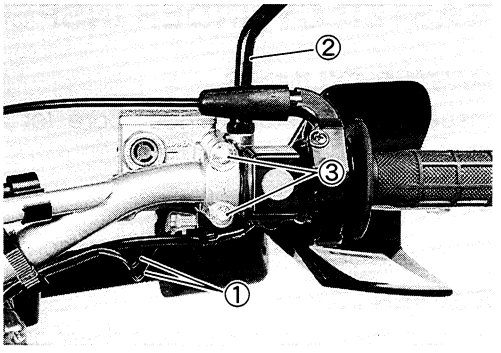

- Remove the knuckle cover ④, brake lever ⑤, and brake light switch ⑥.

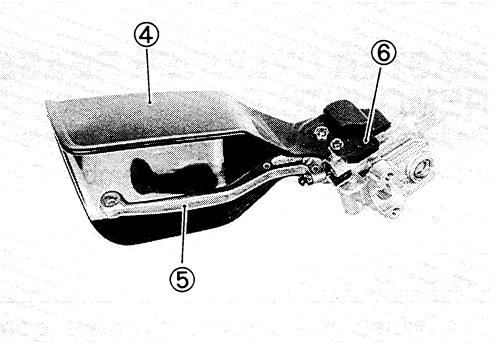

- Remove the reservoir cap ⑦ and diaphragm ⑧.
- Drain the brake fluid.

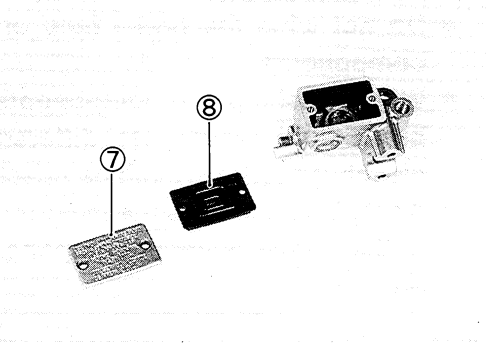

- Pull the dust boot ⑨ out and remove the circlip ⑩.

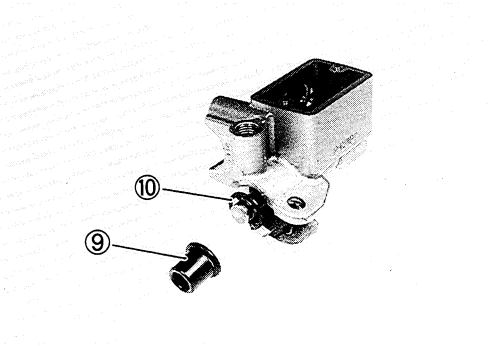

- Remove the piston/secondary cup, primary cup, and spring.

① Piston/secondary cup
② Primary cup
③ Spring

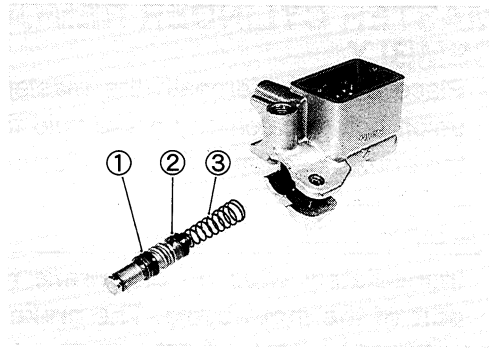

MASTER CYLINDER INSPECTION

MASTER CYLINDER

Inspect the master cylinder bore for any scratches or other damage.

PISTON

Inspect the piston surface for any scratches or other damage.

RUBBER PARTS

Inspect the primary cup, secondary cup, and dust seal for wear or damage.

MASTER CYLINDER REASSEMBLY AND REMOUNTING

Reassemble and remount the master cylinder in the reverse order of removal and disassembly. Pay attention to the following points:

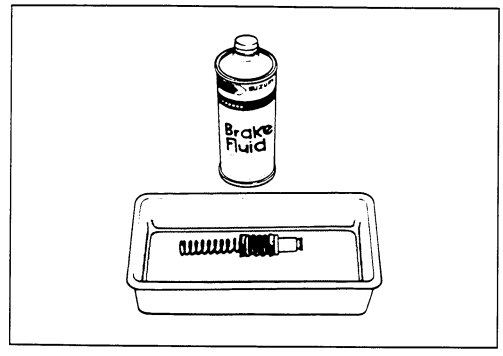

⚠ CAUTION

- **Wash the master cylinder components with new brake fluid before reassembly.**
- **Do not wipe the brake fluid off after washing the components.**
- **When washing the components, use the specified brake fluid. Never use different types of fluid or cleaning solvents such as gasoline, kerosine, etc.**
- **Apply brake fluid to the master cylinder bore and all of the master cylinder components before reassembly.**

BF Specification and classification: DOT 4

- When remounting the master cylinder onto the handlebar, align the master cylinder holder's mating surface with the punch mark on the handlebar and tighten the upper clamp bolt first.

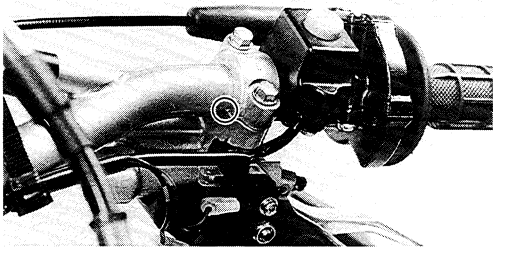

Ⓐ Master cylinder
Ⓑ Master cylinder upper clamp bolt
Ⓒ Handlebar
Ⓓ Clearance

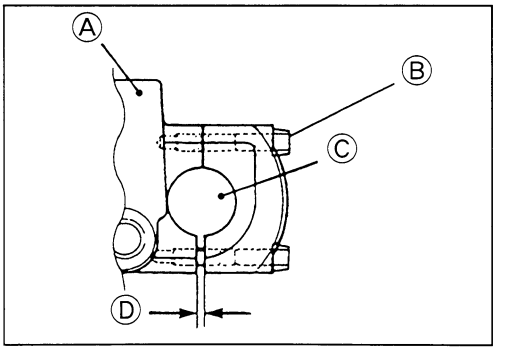

Master cylinder clamp bolt (upper and lower): 10 N·m (1.0 kg-m, 7.0 lb-ft)

- Tighten the brake hose union bolt to the specified torque.

Brake hose union bolt: 23 N·m (2.3 kg-m, 16.5 lb-ft)

CAUTION

Bleed air from the brake system after reassembling the master cylinder. (See p. 2-13.)

REAR BRAKE

CONSTRUCTION

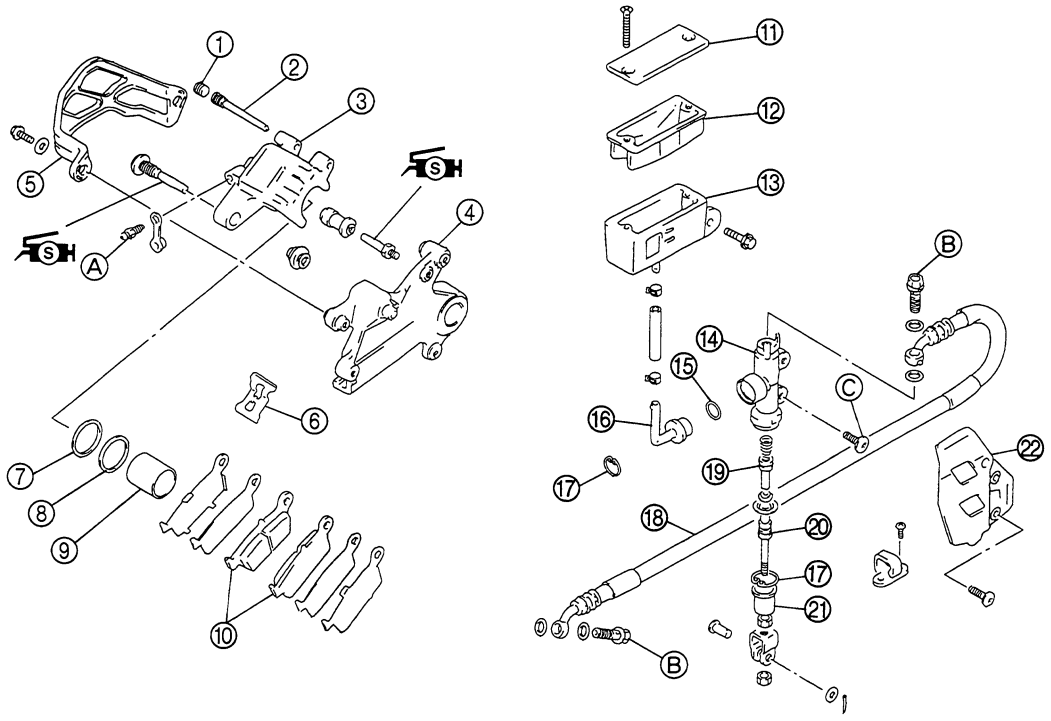

① Brake pad pin plug
② Brake pad pin
③ Brake caliper
④ Brake caliper bracket
⑤ Brake caliper cover
⑥ Springs
⑦ Piston seals
⑧ Dust seals
⑨ Brake caliper piston
⑩ Brake pads
⑪ Master cylinder reservoir cap
⑫ Diaphragm
⑬ Reservoir
⑭ Master cylinder
⑮ O-ring
⑯ Brake hose connector
⑰ Circlip
⑱ Brake hose
⑲ Piston/cup set
⑳ Push rod
㉑ Dust boot
㉒ Master cylinder cover

Ⓐ Air bleeder valve
Ⓑ Brake hose union bolts
Ⓒ Master cylinder set bolts

ITEM	N·m	kg-m	lb-ft
Ⓐ	8	0.8	6.0
Ⓑ	23	2.3	16.5
Ⓒ	10	1.0	7.0

⚠ WARNING

* **This brake system is filled with an ethylene glycol-based DOT 4 brake fluid. Do not use or mix different types of fluid, such as silicone-based or petroleum-based brake fluids.**
* **Do not use any brake fluid taken from old, used or unsealed containers. Never reuse brake fluid left over from the last servicing or which has been stored for long periods of time.**
* **When storing brake fluid, seal the container completely and keep it away from children.**
* **When replenishing brake fluid, take care not to get dust into the fluid.**
* **When washing brake components, use new brake fluid. Never use cleaning solvent.**
* **A contaminated brake disc or brake pad reduces braking performance. Discard contaminated pads and clean the disc with high quality brake cleaner or a neutral detergent.**

⚠ CAUTION

Handle brake fluid with care: the fluid reacts chemically with paint, plastics, rubber materials etc.

BRAKE PAD REPLACEMENT

- Remove the brake pads along with the shims by removing the brake pad pin plug and brake pad pin ①.

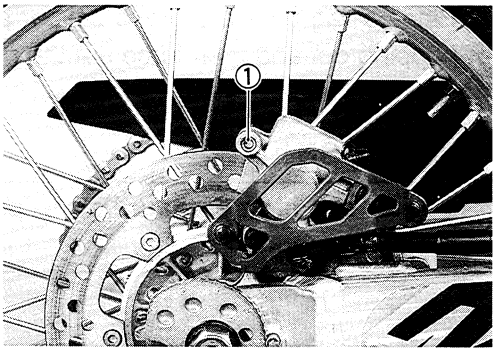

⚠ CAUTION

> *** Do not operate the brake pedal during or after brake pad removal.**
> *** Replace the brake pads as a set, otherwise braking performance will be adversely affected.**

- Install the new brake pads.

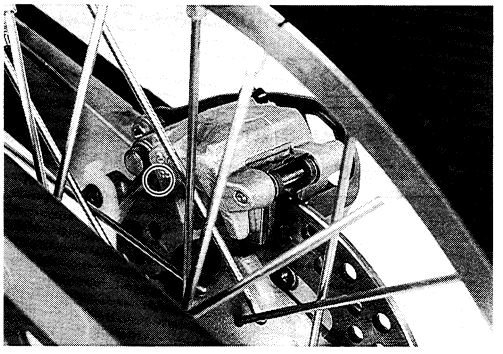

⚠ CAUTION

> **Make sure the brake pad is properly engaged with the guide plate as shown in the photograph.**

NOTE:
After replacing the brake pads, pump the brake pedal a few times to operate the brake correctly and then check the brake fluid level.

BRAKE FLUID REPLACEMENT

- Remove the master cylinder reservoir cap.
- Replace the brake fluid. (See p. 6-38.)

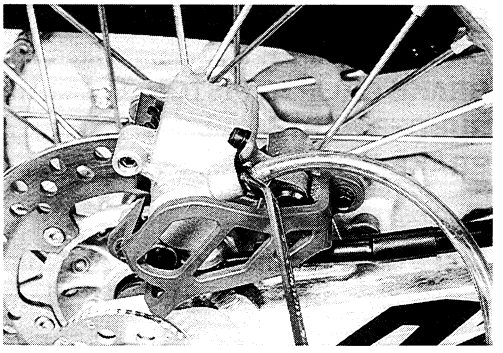

BF Specification and classification: DOT 4

⚠ CAUTION

> **Bleed air from the brake system. (See pp. 2-13 and 2-14.)**

BRAKE CALIPER REMOVAL AND DISASSEMBLY

- Remove the rear wheel (See p. 6-22.)
- Remove the brake caliper cover ①, brake hose union bolt ②, and allow the brake fluid to drain into a suitable receptacle.
- Remove the brake caliper.

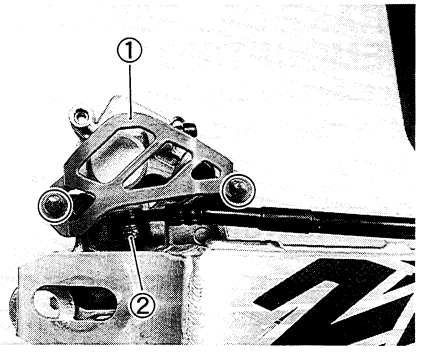

⚠ CAUTION

> **Never reuse the brake fluid left over from previous servicing and which has been stored for long periods of time.**

⚠ WARNING

> **Brake fluid, if it leaks, will interfere with safe running and discolor painted surfaces. Check the brake hose for cracks and oil leakage.**

- Remove the brake pads. (See p. 6-46.)
- Remove the disc cover ③.
- Remove the brake caliper bracket ④ and spring ⑤.

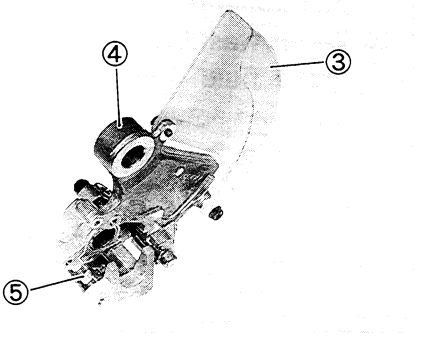

- Place a rag over the brake caliper piston to prevent it from popping out and then force out the piston using compressed air.

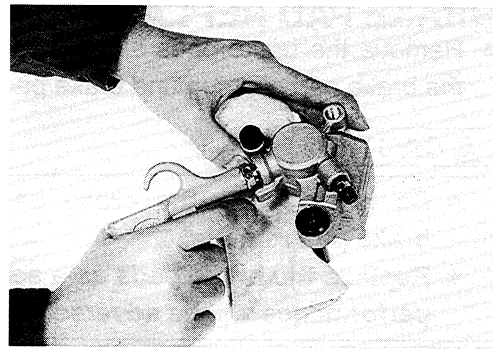

⚠ CAUTION

Do not use high pressure air to prevent brake caliper piston damage.

- Remove the piston seals ① and dust seals ②.

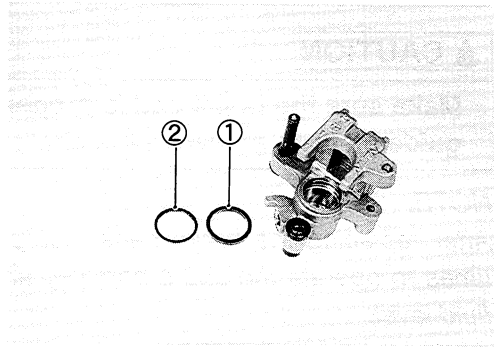

⚠ CAUTION

Do not reuse the piston seals and dust seals to prevent fluid leakage.

BRAKE CALIPER INSPECTION

BRAKE CALIPER .....(See p. 6-40.)
BRAKE CALIPER PISTON .....(See p. 6-40.)
RUBBER PARTS .....(See p. 6-40.)
BRAKE DISC.....(See p. 6-41.)

Service Limit
Brake disc thickness (rear): 4.0 mm (0.16 in)
Brake disc runout (rear): 0.3 mm (0.01 in)

BRAKE CALIPER REASSEMBLY AND REMOUNTING

Reassemble and remount the brake caliper in the reverse order of removal and disassembly. Pay attention to the following points:

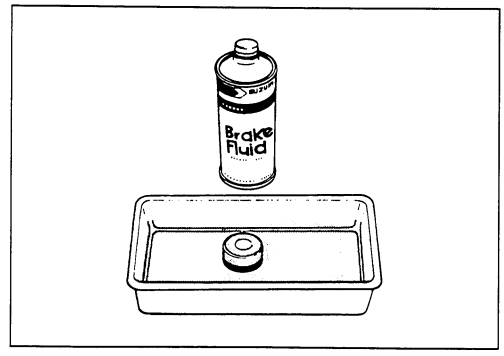

⚠ CAUTION

- **Wash the brake caliper components with new brake fluid before reassembly.**
- **Do not wipe the brake fluid off after washing the components.**
- **When washing the components, use the specified brake fluid. Never use different types of fluid or cleaning solvents such as gasoline, kerosine, etc.**
- **Replace the piston seals and dust seals with new ones.**
- **Apply brake fluid to all of the seals, brake caliper bores, and pistons before reassembly.**

BF Specification and classification: DOT 4

BRAKE CALIPER SLIDE PIN

- Apply SUZUKI SILICON GREASE to the brake caliper slide pin.

99000-25100: SUZUKI SILICON GREASE

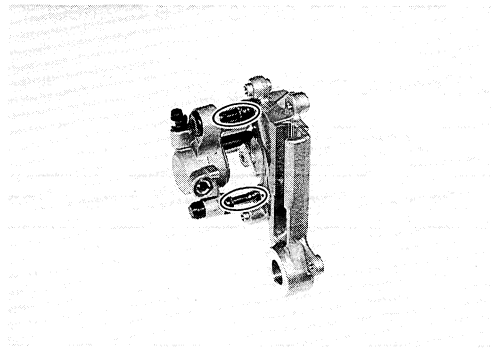

- Tighten the brake pad pin ① and brake hose union bolt ② to the specified torque.

Brake pad pin ①: 18 N·m (1.8 kg-m, 13.0 lb-ft)
Brake hose union bolt ②: 23 N·m (2.3 kg-m, 16.5 lb-ft)

- Install the rear wheel. (See p. 6-25.)

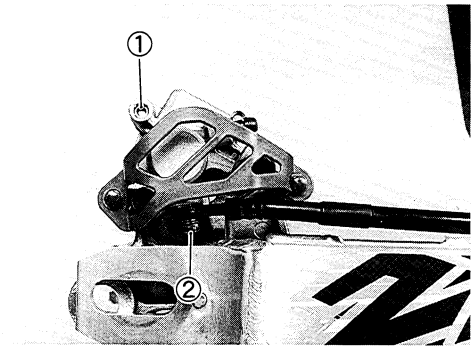

NOTE:
Before remounting the brake caliper, push the brake caliper pistons all the way into the caliper.

⚠ CAUTION

Bleed air from the system after reassembling the brake caliper. (See pp. 2-13 and 2-14.)

MASTER CYLINDER REMOVAL AND DISASSEMBLY

- Remove the master cylinder cover ①.
- Remove the reservoir mounting bolt ②.

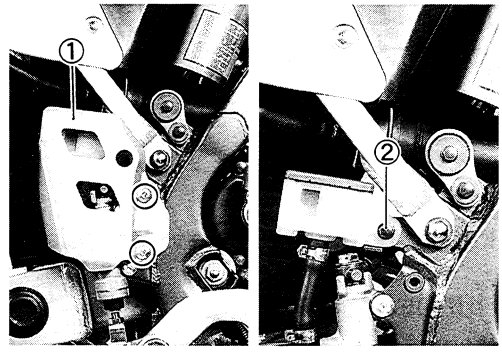

- Place a rag underneath the master cylinder's brake hose union bolt to catch any brake fluid that might spill. Remove the brake hose union bolt ③ and disconnect the brake hose.
- Loosen the locknut ④.
- Remove the master cylinder along with the reservoir by removing the mounting bolts ⑤ and push rod.

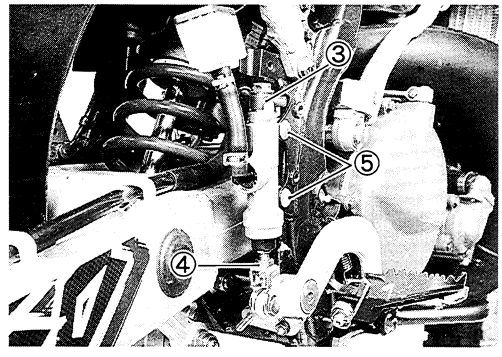

⚠ CAUTION

Immediately wipe off any brake fluid contacting any part of the motorcycle. The brake fluid reacts chemically with paint, plastics and rubber materials, etc., and will damage them severely.

- Remove the brake hose connector ① by removing the circlip.
- Remove the O-ring ②.

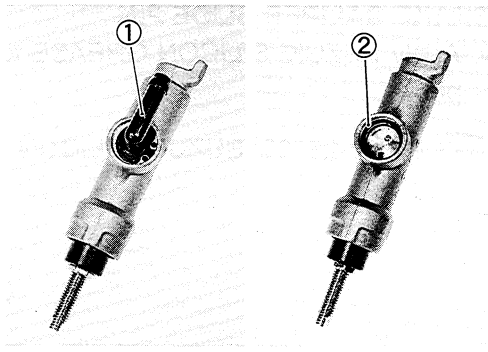

⚠ CAUTION

Replace the O-ring with a new one.

- Pull the dust boot ③ out, remove the circlip and push rod ④.

TOOL 09900-06108: Snap ring pliers

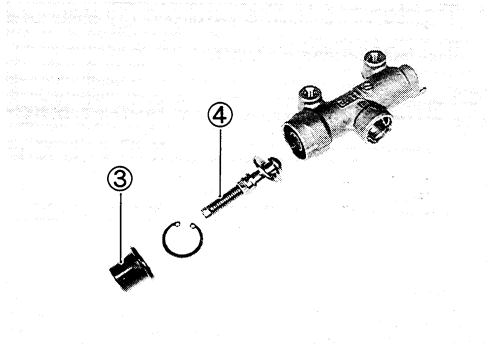

- Remove the piston/primary cup set ⑤.

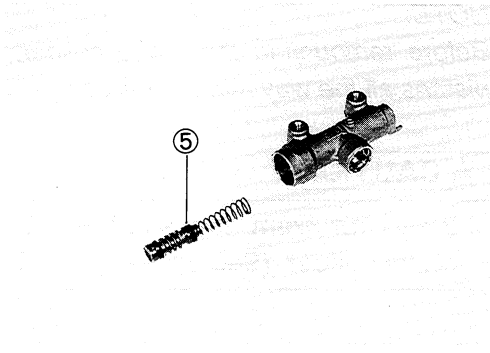

MASTER CYLINDER INSPECTION

MASTER CYLINDER

Inspect the master cylinder bore for any scratches or other damage.

PISTON

Inspect the piston surface for any scratches or other damage.

RUBBER PARTS

Inspect the primary/secondary cup and all of the rubber parts for damage.

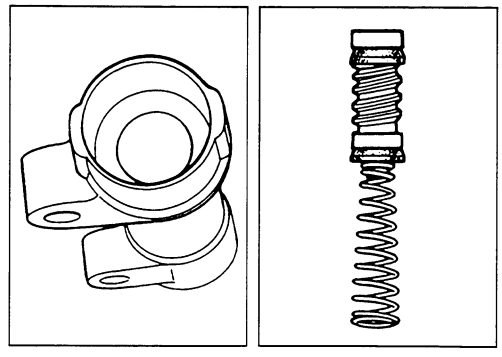

MASTER CYLINDER REASSEMBLY AND REMOUNTING

Reassemble and remount the master cylinder in the reverse order of removal and disassembly. Pay attention to the following points:

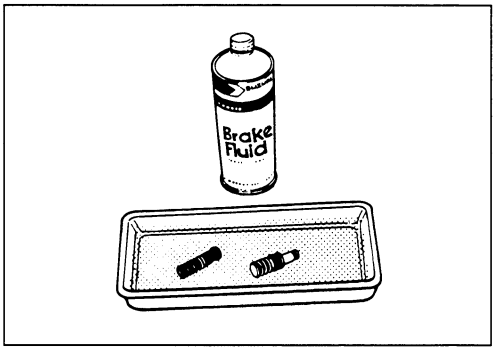

CAUTION

- **Wash the master cylinder components with new brake fluid before reassembly.**
- **Do not wipe the brake fluid off after washing the components.**
- **When washing the components, use the specified brake fluid. Never use different types of fluid or cleaning solvents such as gasoline, kerosine, etc.**
- **Apply brake fluid to the master cylinder bore and all of the master cylinder components before reassembly.**

Specification and Classification: DOT 4

- Tighten the brake hose union bolt to the specified torque before inserting the union bolt stopper ① of master cylinder groove ②.

Brake hose union bolt: 23 N·m (2.3 kg-m, 16.5 lb-ft)

- Tighten the master cylinder mounting bolt ③ to the specified torque.

Master cylinder set bolts: 10 N·m (1.0 kg-m, 7.0 lb-ft)

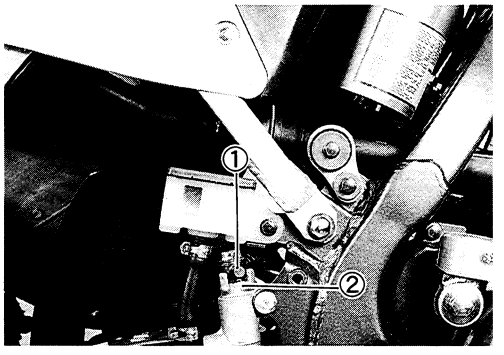

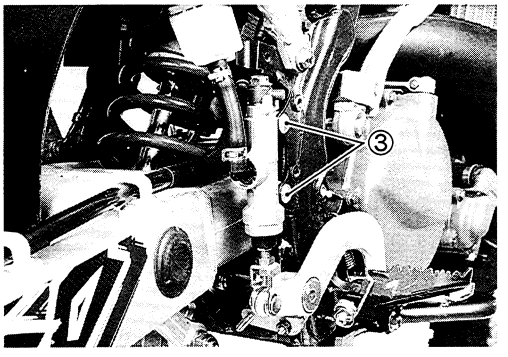

CAUTION

- **Bleed air from the system after reassembling the master cylinder. (See pp. 2-13 and 2-14.)**
- **Adjust the brake pedal height. (See p. 2-12.)**

ELECTRICAL SYSTEM

CONTENTS

CAUTIONS IN SERVICING 7- 1
LOCATION OF ELECTRICAL COMPONENTS 7- 3
LIGHTING SYSTEM 7- 4
IGNITION SYSTEM 7- 7
SPEEDOMETER AND PILOT INDICATOR 7-12
LAMPS 7-14
TURN SIGNAL RELAY 7-16
SWITCHES 7-16

CAUTIONS IN SERVICING

CONNECTOR

- When disconnecting a connector, be sure to hold the terminals; do not pull the lead wires.
- When connecting a connector, push it in so it is firmly attached.
- Inspect the connector for corrosion, contamination and any breakage in the cover.

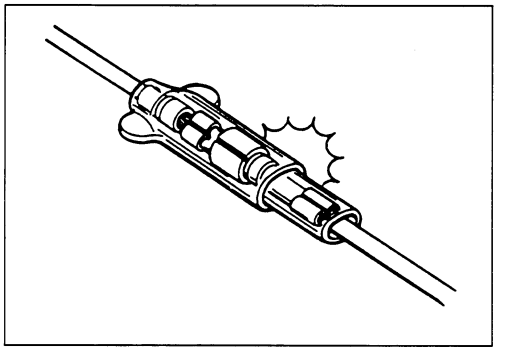

COUPLER

- With a lock-type coupler, be sure to release the lock before disconnecting it. When connecting a coupler, push it in until the lock clicks shut.
- When disconnecting a coupler, be sure to hold the coupler; do not pull the lead wires.
- Inspect each terminal on the coupler for looseness or bends.
- Inspect each terminal for corrosion and contamination.

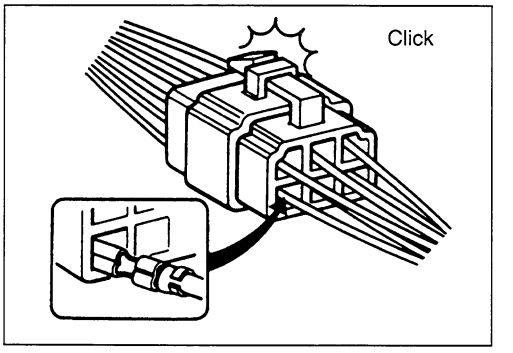

CLAMP

- Refer to "WIRE, CABLE AND HOSE ROUTING" (See P. 8-7.) for proper clamping procedures.
- Bend the clamp properly, as shown in the illustration.
- When clamping the wire harness, do not allow it to hang down.
- Do not use wire or any other substitute for the band-type clamp.

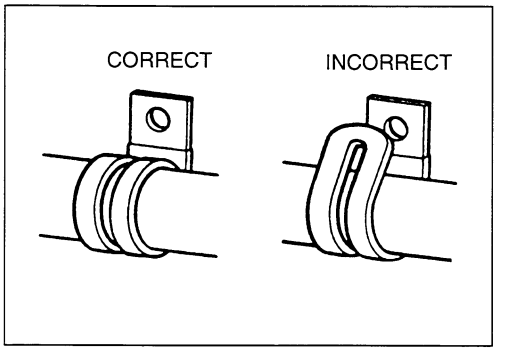

SEMI-CONDUCTOR EQUIPPED PART

- Do not drop any part that contains a semi-conductor (e.g., CDI unit, regulator/rectifier).
- When inspecting the part, follow the inspection instructions carefully. Neglecting proper procedures may cause this part to be damaged.

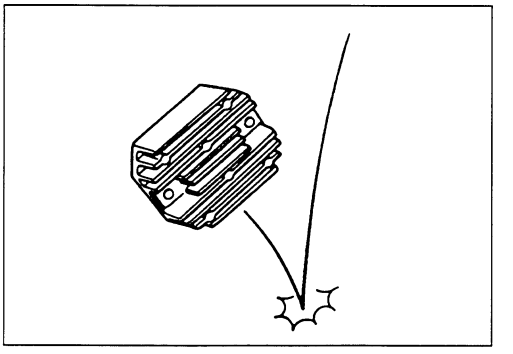

WIRING PROCEDURE

- Properly route the wire harness according to "WIRE, CABLE AND HOSE ROUTING". (See pp. 8-8 to 8-14.)

USING THE POCKET TESTER

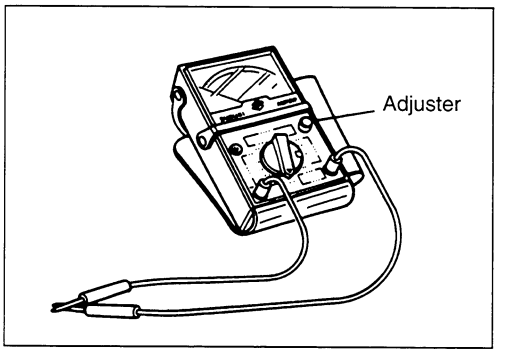

- Properly use the pocket tester (⊕) and (⊖) probes. Improper use can cause damage to the motorcycle and tester.
- If the voltage and current values are not known, begin measuring in the highest range.
- After changing the resistance range, perform the 0 Ω adjustment. This should be done before measuring.
- When measuring the resistance, make sure that no voltage is applied. If voltage is applied, the tester will be damaged.
- After using the tester, turn the switch to the OFF position.

LOCATION OF ELECTRICAL COMPONENTS

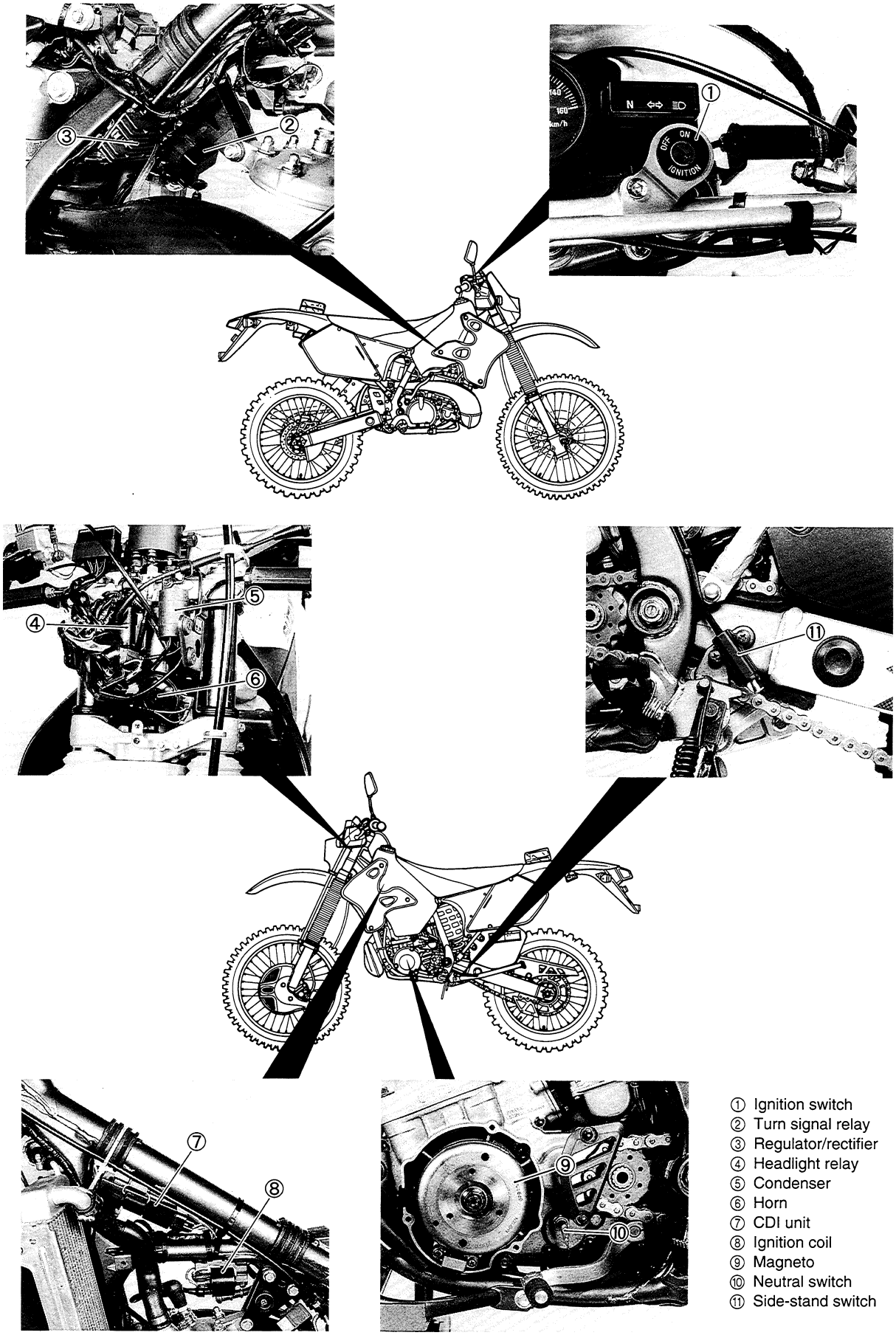

① Ignition switch
② Turn signal relay
③ Regulator/rectifier
④ Headlight relay
⑤ Condenser
⑥ Horn
⑦ CDI unit
⑧ Ignition coil
⑨ Magneto
⑩ Neutral switch
⑪ Side-stand switch

LIGHTING SYSTEM

The lighting system for this motorcycle uses a magneto which is mounted on the flywheel. The lighting coils are mounted on the magneto stator and generate AC current as the magneto rotor turns. The AC current, which is generated in the charging coil, flows to the regulator/rectifier where it is changed to DC current. This DC current is then supplied to the headlight, taillight, and meter light.

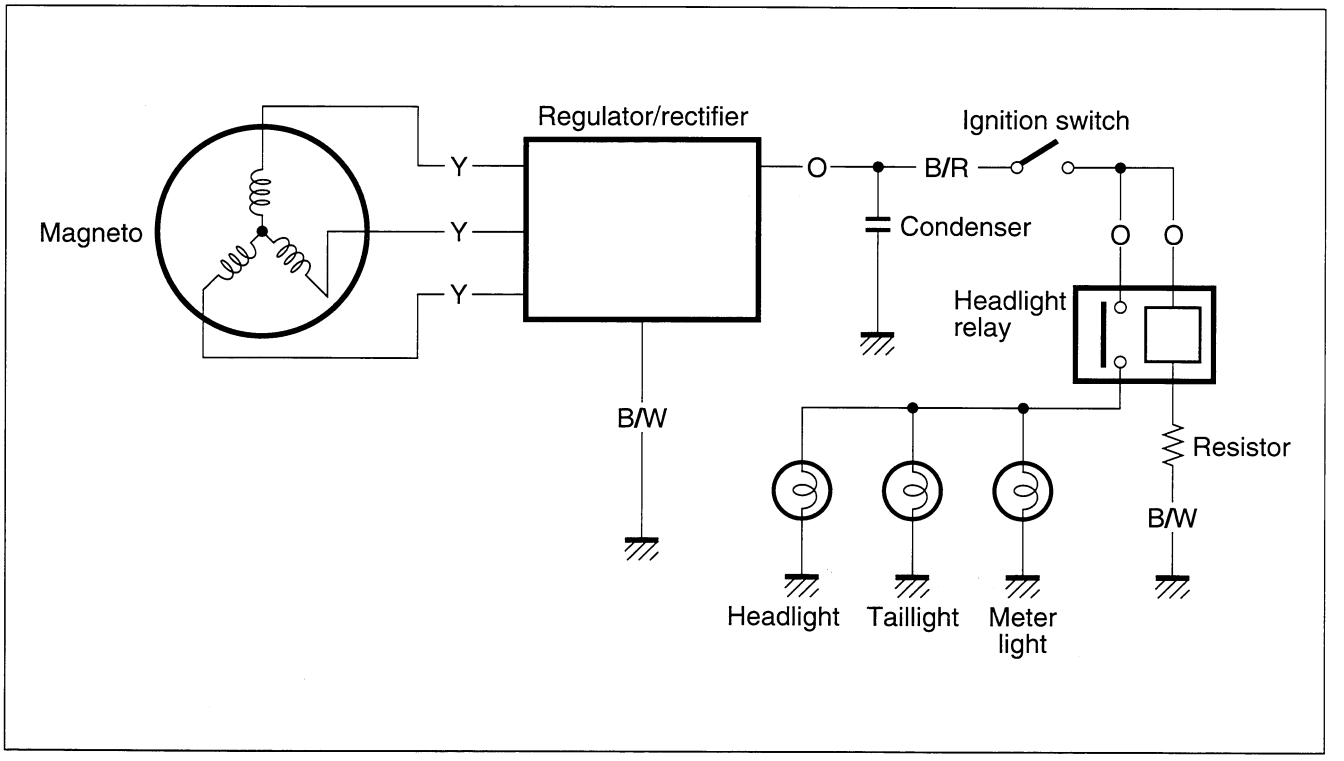

TROUBLE SHOOTING

A light does not light or is not bright.

Check any accessory which excessively wastes electric power.

- Installed → • Remove the accessory.
- No installed ↓

Check the continuity of the stator coil. (See p. 7-5.)

- No continuity → • Faulty stator coil or disconnected lead wire(-s).
- Continuity ↓

Continued on the next page

Inspect the regulator/rectifier.
(See p.7-6.)
— No good → •Faulty regulator/rectifier.

OK

Inspect the condenser.
(See p. 7-6.)
— No good → •Faulty condenser.

OK
→ •Short circuit of wire harness.
•Poor contact of couplers.
•Faulty headlight relay.

INSPECTION

STATOR COIL CONTINUITY INSPECTION

- Remove the fuel tank. (See p. 4-2.)
- Disconnect the stator coil lead wire coupler ①.

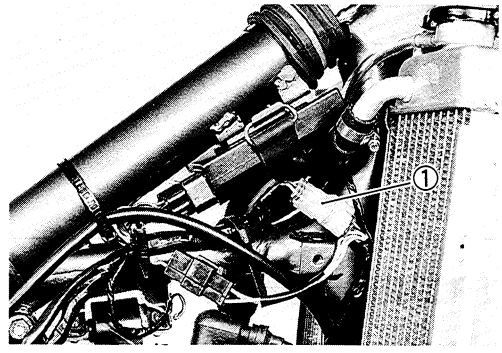

Using a pocket tester, check the continuity between the three lead wires.
If there is no continuity, replace the stator coil with a new one.

TOOL 09900-25002: Pocket tester

Tester knob indication: × 1 Ω range

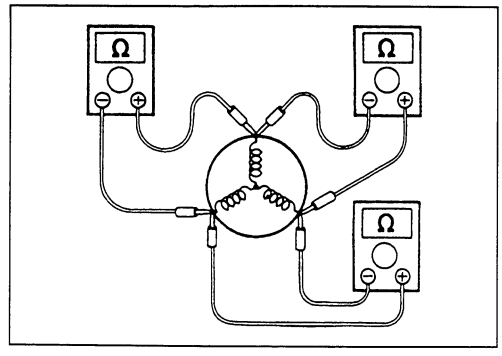

REGULATOR/RECTIFIER

Check the continuity between the terminals. Refer to the following table.

- If the continuity is incorrect, replace the regulator/rectifier.

TOOL 09900-25002: Pocket tester

Tester knob indication: × 1 kΩ range

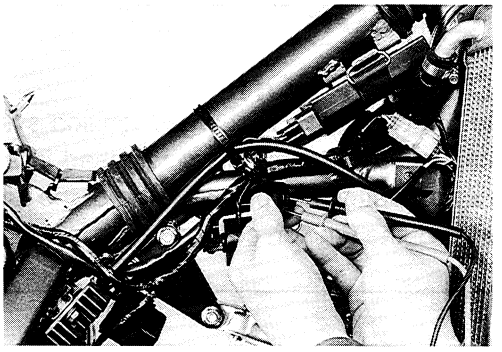

Unit: kΩ

⊖ Probe of tester to:	⊕ Probe of tester to:				
	Y_1	Y_2	Y_3	O	B/W
Y_1		30–150	30–150	1–6	20–100
Y_2	30–150		30–150	1–6	20–100
Y_3	30–150	30–150		1–6	20–100
O	20–100	20–100	20–100		10–60
B/W	1–6	1–6	1–6	2–10	

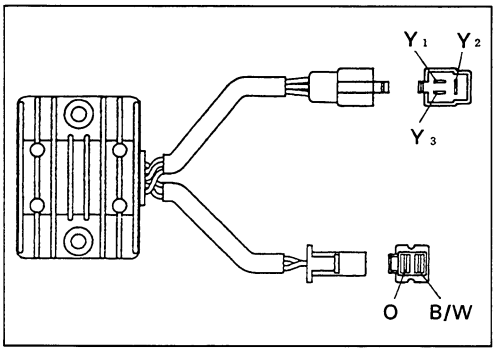

CONDENSER

- Remove the headlight. (See p. 7-14.)
- Turn the ignition switch to the "ON" position to discharge the condenser.

Using a pocket tester, check the continuity between the condenser lead wires as follows.
Red (⊕ Probe) – Black/White (⊖ Probe)

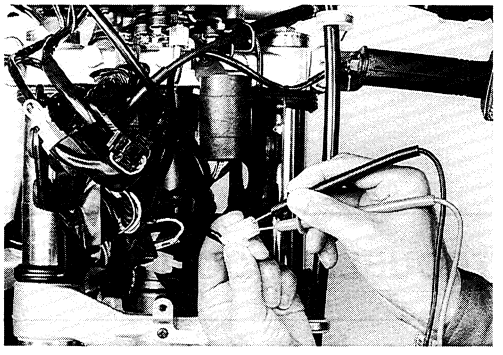

Make sure the tester needle moves to 0 Ω and then gradually returns to ∞.
If the needle does not move to 0 Ω or does not gradually return to ∞, replace the condenser with a new one.

TOOL 09900-25002: Pocket tester

Tester knob indication: × 1 kΩ range

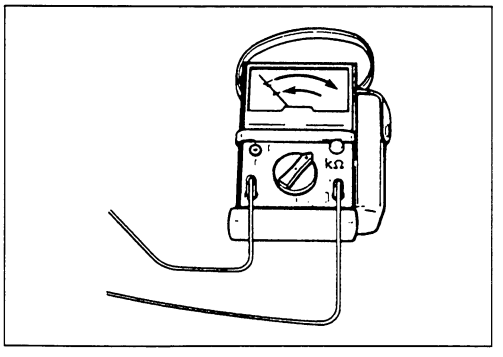

IGNITION SYSTEM

DESCRIPTION

In the capacitor discharged ignition system, the electrical energy generated by the magneto charges the capacitor. This energy is released in a single surge at the specified ignition timing point and the current flows through the primary side of the ignition coil. A high voltage current is induced in the secondary windings of the ignition coil, resulting in a strong spark between the spark plug gap.

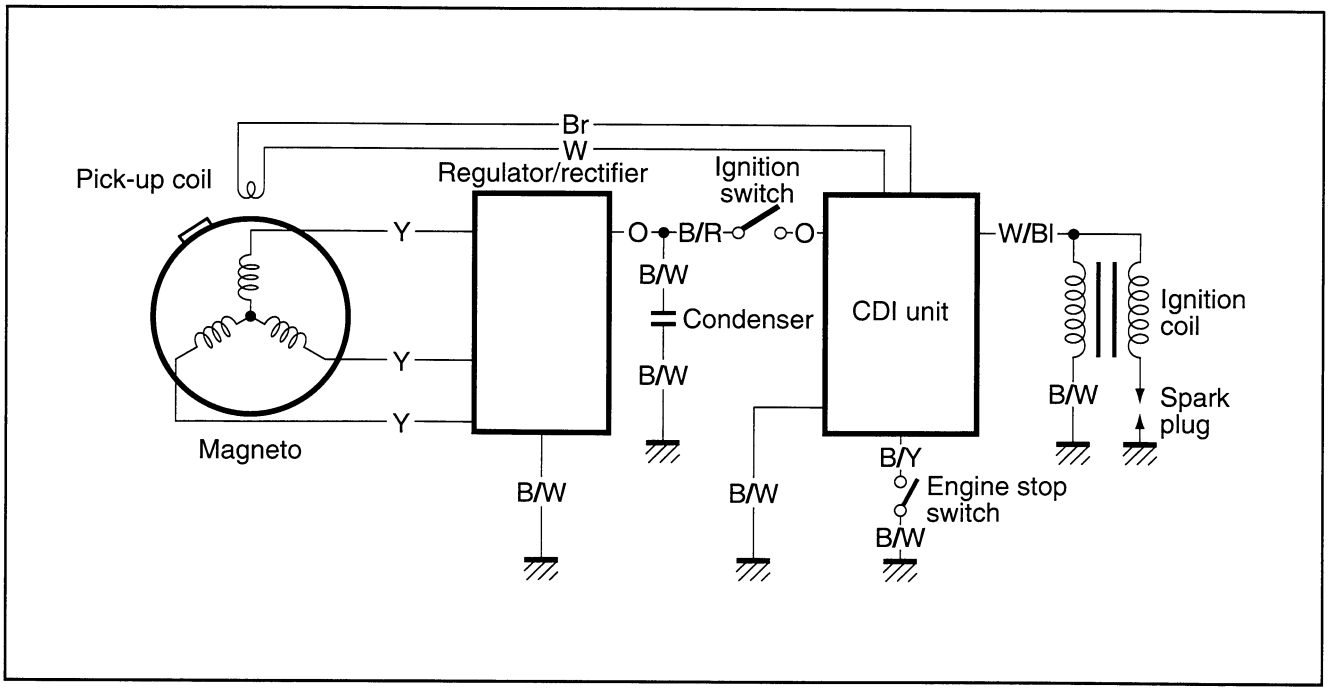

TROUBLE SHOOTING

No spark or poor spark

Check the ignition system couplers for poor connection.
- Looseness → • Poor connection of the lead wire.

Correct ↓

Check the continuity of the stator coil. (See p. 7-5.)
- No continuity → • Faulty stator coil.

Continuity ↓

Inspect the regulator/rectifier. (See p. 7-6.)
- No good → • Faulty regulator/rectifier.

OK ↓

Continued on the next page.

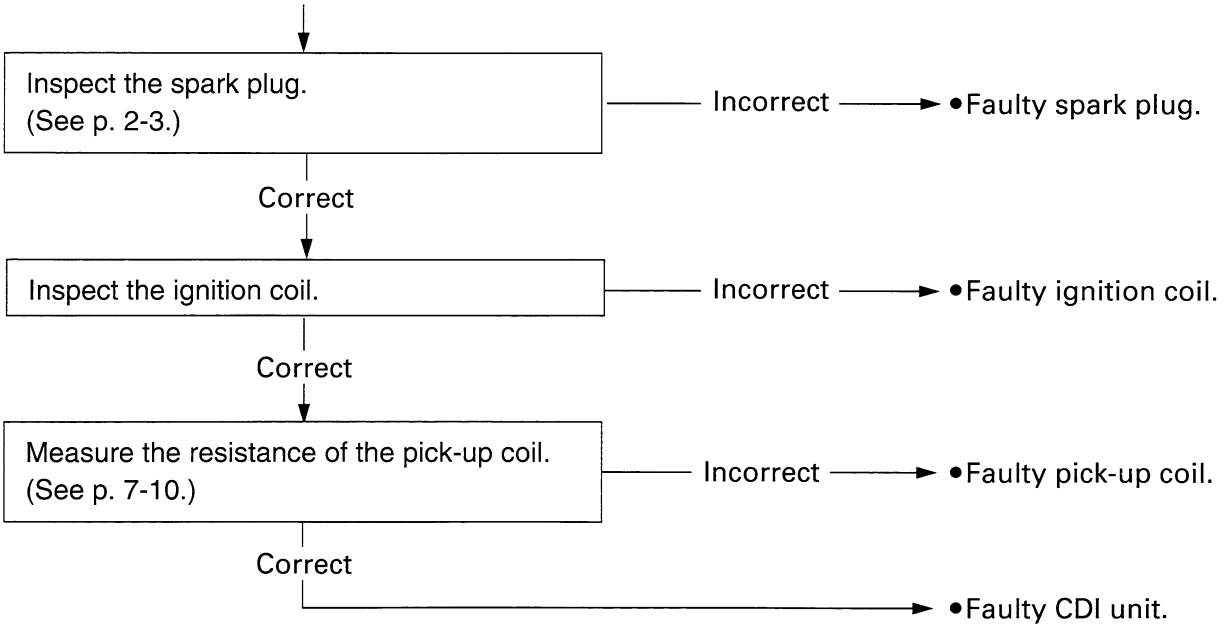

INSPECTION

IGNITION COIL PRIMARY PEAK VOLTAGE

- Remove the fuel tank. (See p. 4-2.)
- Remove the spark plug cap.
- Connect a new spark plug to the spark plug cap and ground it to the crankcase.

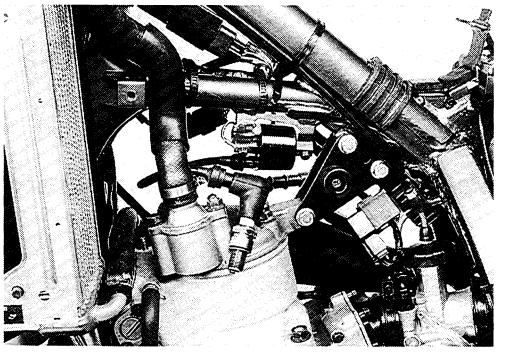

NOTE:
Make sure that the spark plug cap and spark plug is connected properly.

Measure the ignition coil primary peak voltage in the following procedure.

- Connect the multi circuit tester with the peak voltage adaptor as follows.

Ignition coil:
White/Blue terminal–Ground
(⊕ Probe) (⊖ Probe)

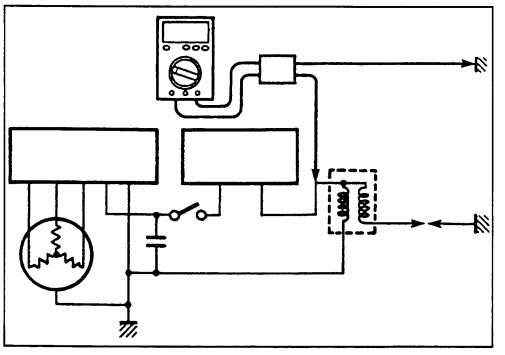

NOTE:
Do not disconnect the ignition coil primary wire.

TOOL 09900-25008: Multi circuit tester set

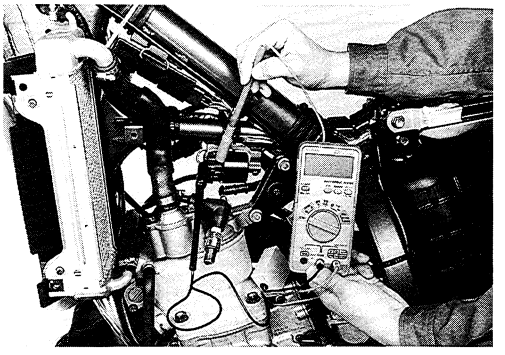

⚠ CAUTION

When using the multi circuit tester and peak volt adaptor, refer to the appropriate instruction manual.

- Shift the transmission into neutral, turn the ignition switch to the "ON" position and grasp the clutch lever.

- Kick the kick crank and allow the engine to turn for a few seconds, and then measure the ignition coil primary peak voltage.
- Repeat the above procedure a few times and measure the highest ignition coil primary peak voltage.

Tester knob indication: Voltage (⎓)

Ignition coil primary peak voltage: More than 150 V

⚠ WARNING

While testing, do not touch the tester probes and spark plugs to prevent receiving an electric shock.

IGNITION COIL (check with the electro tester)

- Remove the fuel tank. (See p. 4-2.)
- Remove the ignition coil.

NOTE:
Make sure that the three-needle sparking distance of the electro tester is set at 8 mm (0.3 in).

With the tester, test the ignition coil for sparking performance as follows.

- Connect the electro tester to the ignition coil as shown in the illustration.

If no spark or an orange color spark occurs, the ignition coil may be defective.

TOOL 09900-28107: Electro tester

Spark performance: Over 8 mm (0.3 in)

⚠ WARNING

Do not touch the wire clips to prevent an electric shock when testing.

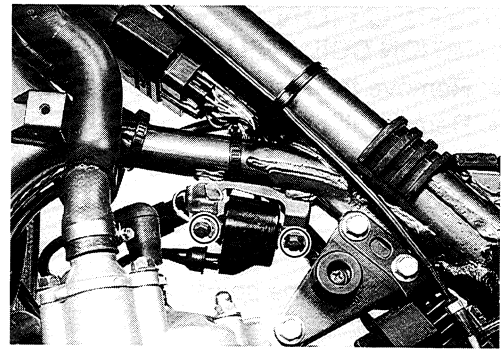

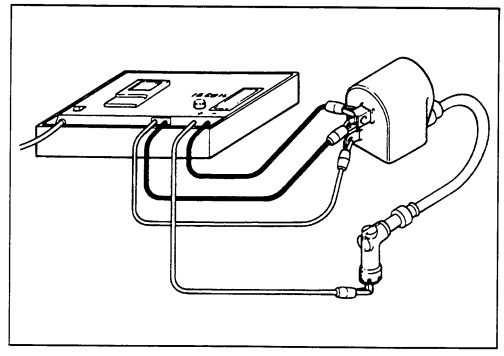

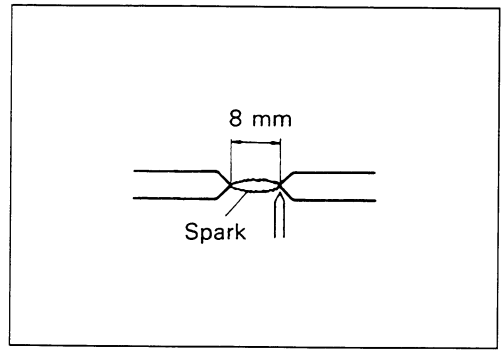

IGNITION COIL (check with the pocket tester)

A SUZUKI pocket tester or an ohm meter may be used, in stead of the electro tester. In either case, the ignition coil is to be checked for continuity in both primary and secondary windings. Exact ohmic readings are not necessary, but, if the windings are in good condition, their continuity should close to the specific values.

TOOL 09900-25002: Pocket tester

Ignition coil resistance

Primary: 0–1 Ω (⊕ Terminal–⊖ Ground)

Tester knob indication: × 1 kΩ range

Secondary: 15–18 Ω (Plug cap–Ground)

Tester knob indication: × 1 kΩ range

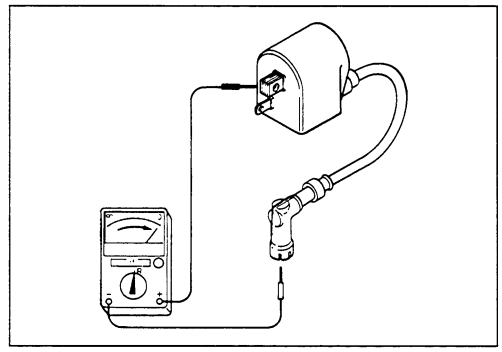

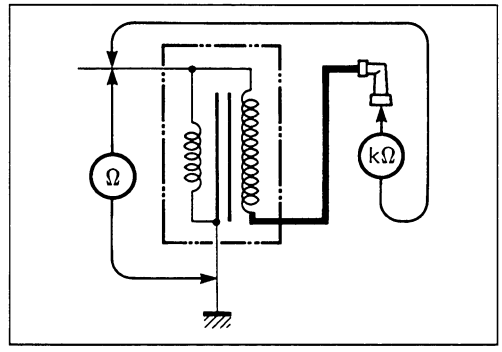

PICK-UP COIL PEAK VOLTAGE

- Remove the fuel tank. (See p. 4-2.)

NOTE:
Make sure that all of the couplers are connected properly.

- Disconnect the CDI unit coupler ① at the CDI unit.
  Measure the pick-up coil peak voltage between the Brown and White lead wires on the CDI unit coupler.
- Connect the multi circuit tester with the peak volt adaptor as follows.

White (⊕ Probe)–Brown (⊖ Probe)

TOOL 09900-25008: Multi circuit tester set

⚠ CAUTION

When using the multi circuit tester and peak volt adaptor, refer to the appropriate instruction manual.

- Shift the transmission into neutral, turn the ignition switch to the "ON" position and grasp the clutch lever.
- Kick the kick crank and allow the engine to turn for a few seconds, and then measure the pick-up coil peak voltage.

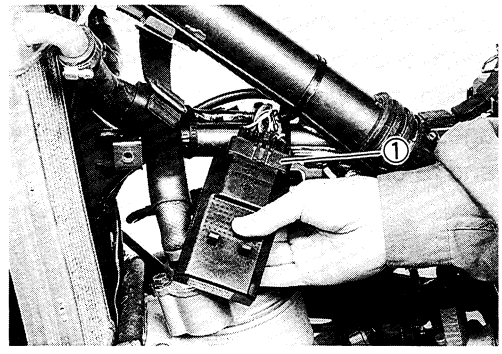

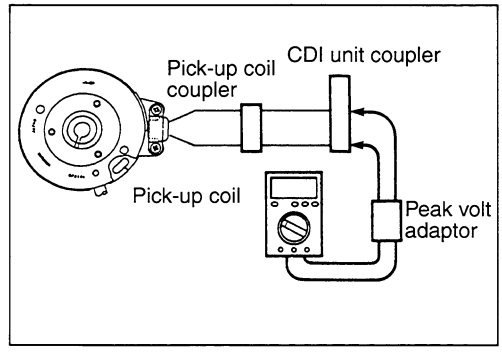

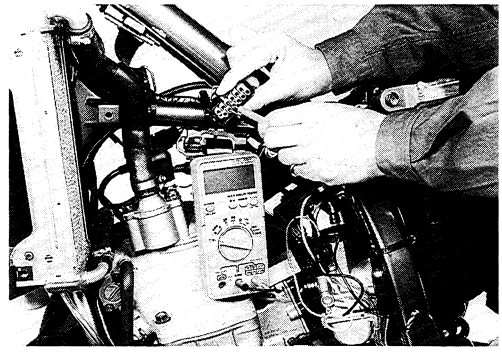

- Repeat the above procedure a few times and measure the highest signal generator peak voltage.

Tester knob indication: Voltage (⎓)

Pick-up coil peak voltage: More than 2.0 V (White–Brown)

If the peak voltage measured on the CDI unit coupler is lower than the standard value, measure the peak voltage on the pick-up coil coupler as follows.

- Disconnect the pick-up coil coupler and connect the multi circuit tester with the peak volt adaptor.

White terminal–Brown terminal
(⊕ Probe) (⊖ Probe)

- Measure the pick-up coil peak voltage in the same manner as on the CDI unit coupler.

Tester knob indication: Voltage (⎓)

Pick-up coil peak voltage: More than 2.0 V (White–Brown)

If the peak voltage on the pick-up coil lead wire couplers is within specification, but on the CDI unit coupler is out of specification, the wire harness must be replaced. If both peak voltages are out of specification, the pick-up coil must be replaced and re-checked.

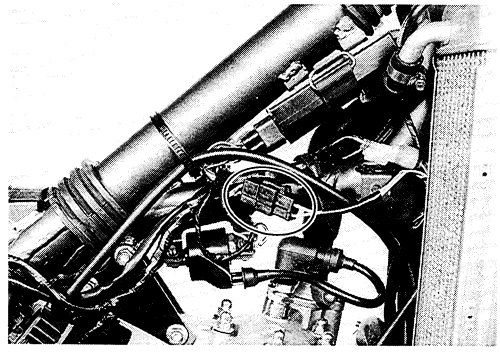

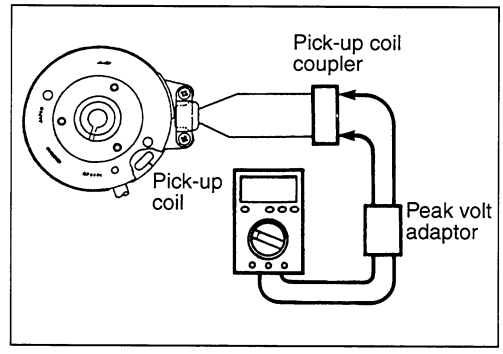

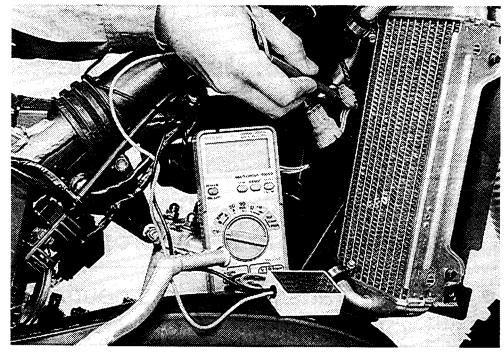

PICK-UP COIL

- Remove the fuel tank and disconnect the pick-up coil coupler.
- Measure the resistance between the lead wires. If the resistance is not within the specified value, the pick-up coil must be replaced.

Pick-up coil resistance: 81–121 Ω (Brown–White)

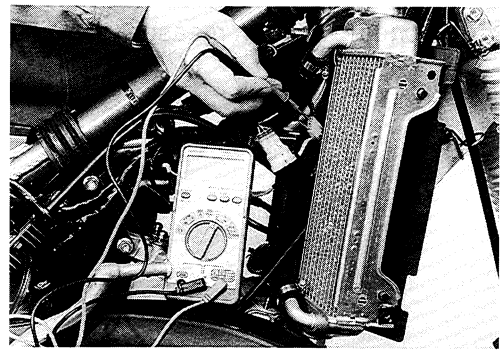

SPEEDOMETER AND PILOT INDICATOR

REMOVE AND DISASSEMBLY

- Remove the speedometer and pilot indicator. (See p. 6-17.)
- Disassemble the speedometer and pilot indicator as follows.

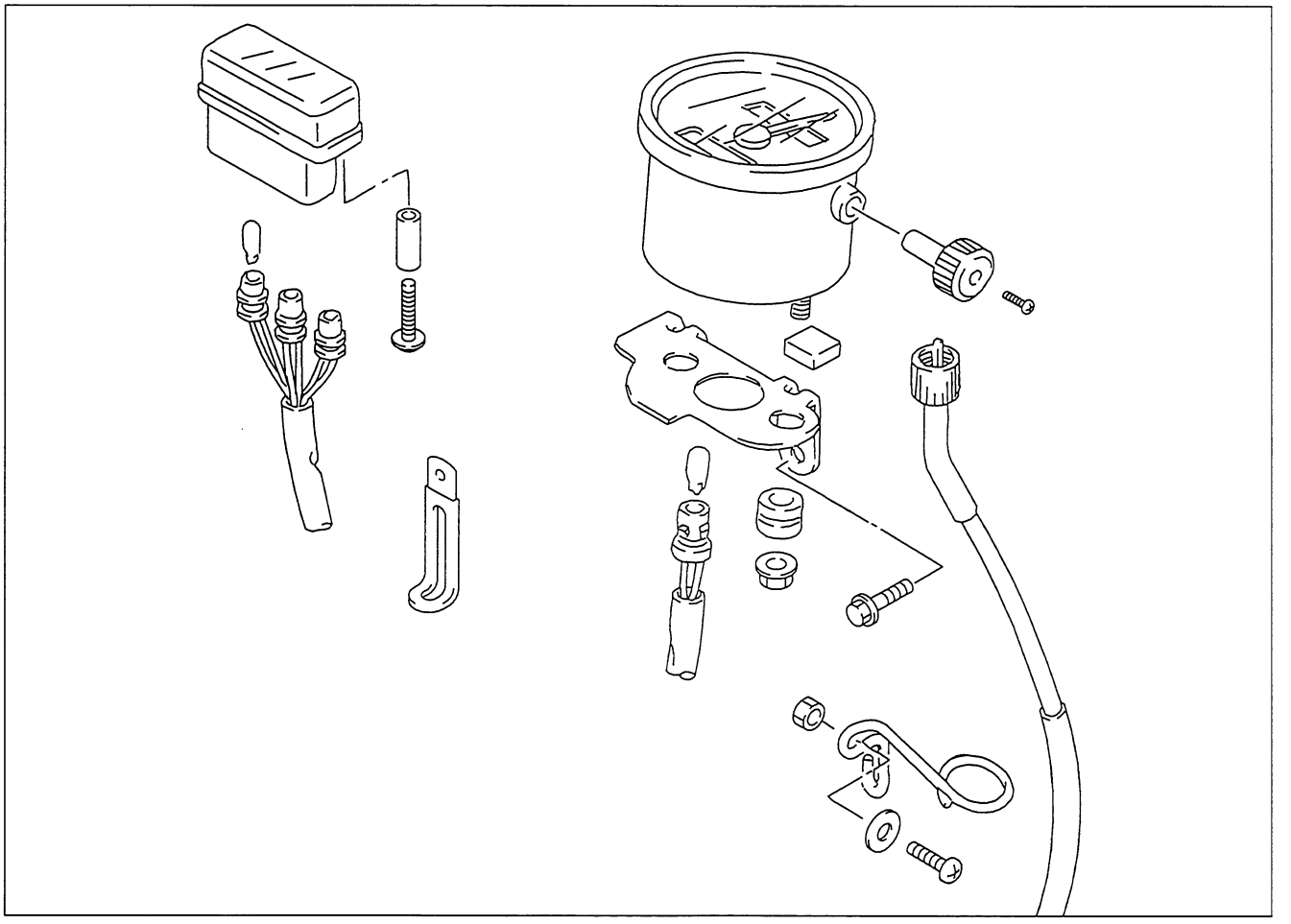

INSPECTION

Using a pocket tester, check the continuity between lead wires in the diagram on the next page.
If the continuity measured is incorrect, replace the respective parts.

TOOL 09900-25002: Pocket tester

Tester knob indication: × 1 kΩ range

NOTE:
When making this test, it is not necessary to remove the speedometer and pilot indicator.

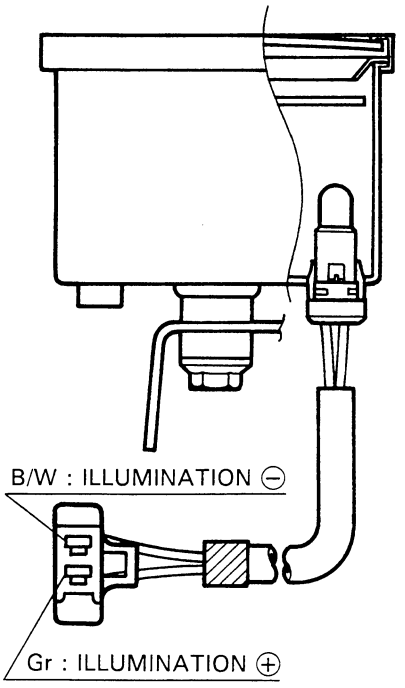

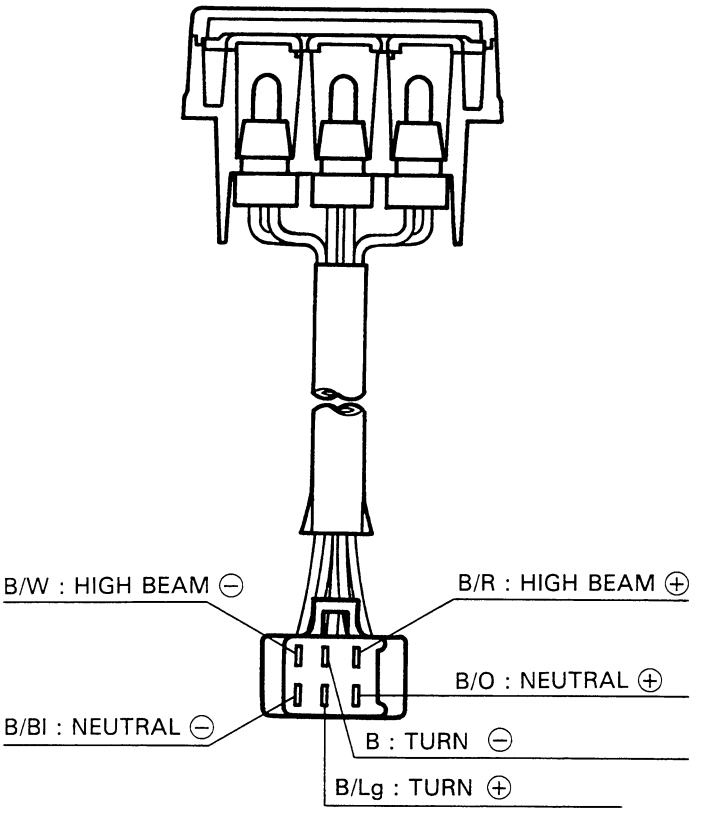

ITEM	⊕ Probe of tester to:	⊖ Probe of tester to
ILLUMI	Gr	B/W
HIGH BEAM	B/R	B/W
NEUTRAL	B/O	B/Bl
TURN	B/Lg	B

B; : Black
Cr : Gray
B/Bl : Black with Blue tracer
B/O : Black with Orange tracer
B/R : Black with Red tracer
B/Lg : Black with Light green tracer
B/W : Black with White tracer

LAMPS

HEADLIGHT

To test the fuel meter, perform the following tests.

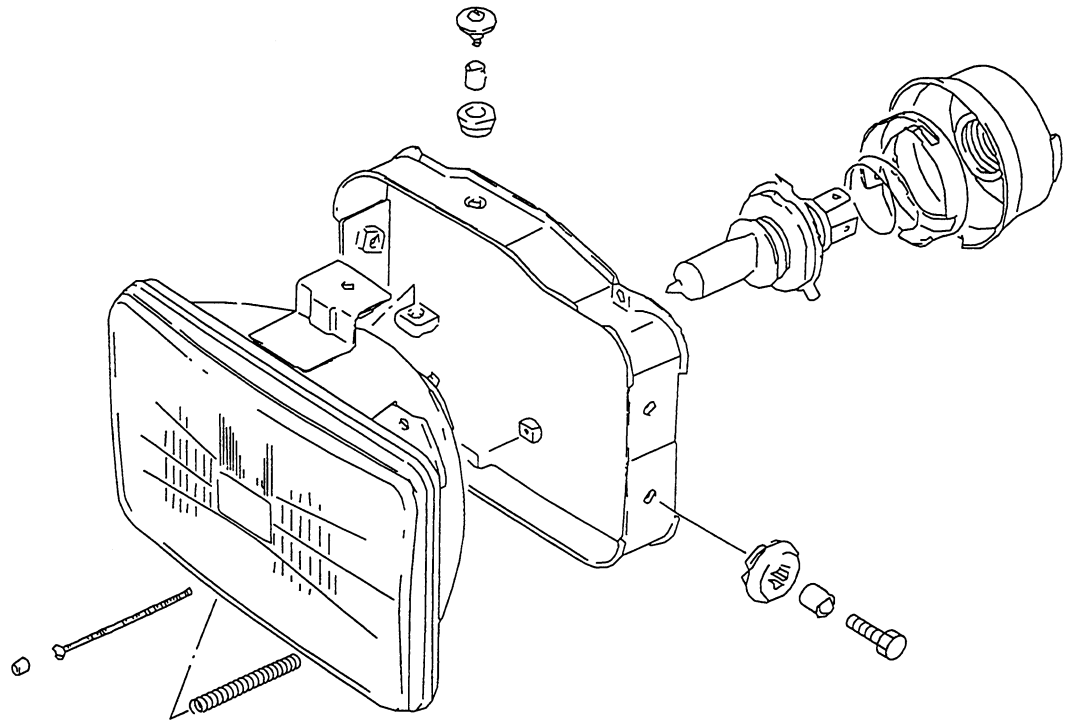

Headlight bulb: 12 V 60/55 W

NOTE:
Adjust the headlight (vertical and horizontal) after reassembling.

BULB REPLACEMENT

- Remove the headlight cover. (See p. 6-2.)
- Remove the headlight ①.
- Disconnect the socket ② and remove the rubber cap ③.
- Remove the bulb ④ by unlocking the bulb holder spring ⑤.
- Reassemble the bulb in the reverse order of removal.

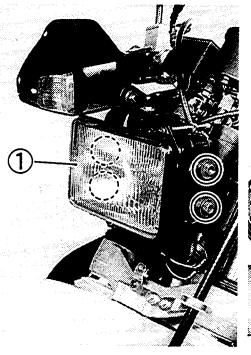

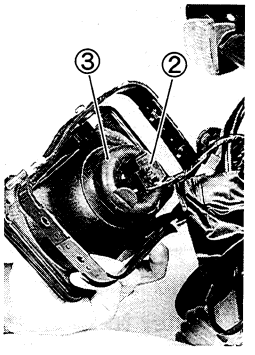

⚠ CAUTION

If you touch the bulb with your bare hands, clean it with a cloth moistened with alcohol or soapy water to prevent premature bulb failure.

TAIL/BRAKE LIGHT AND TURN SIGNAL LIGHT

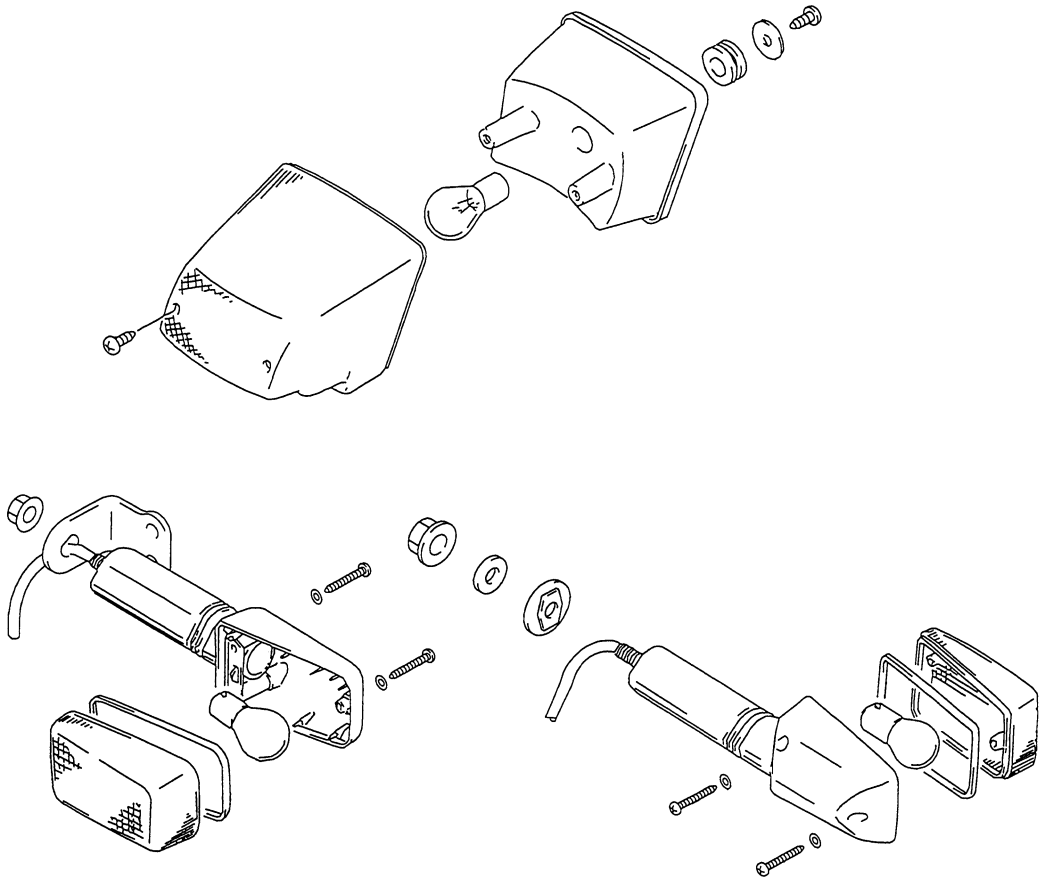

Tail/Brake light bulb: 12 V 5/21 W
Turn signal light bulb: 12 V 21 W

BULB REPLACEMENT

- Remove each light lens.
- Push in on the bulb, turn it to the left, and pull it out.

⚠ CAUTION

Do not overtighten the lens fitting screws.
If you touch the bulb with your bare hands, clean the bulb with a cloth moistened with alcohol or soapy water to prevent premature bulb failure.

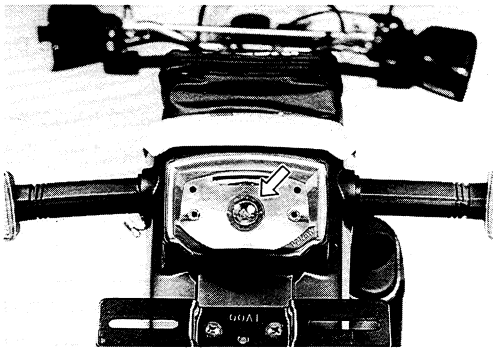

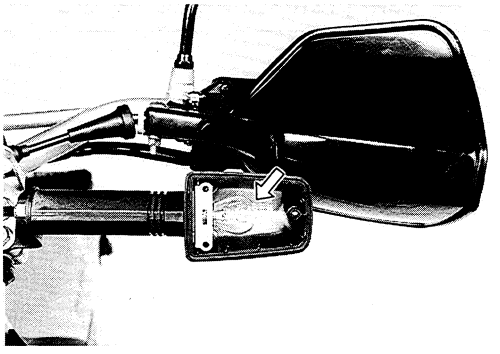

TURN SIGNAL RELAY

The turn signal realy ① is located under the fuel tank.
If the turn signal light does not light, inspect the bulb or repair the circuit connection.
If the bulb and circuit connections are correct, the turn signal relay may be faulty, replace it with a new one.

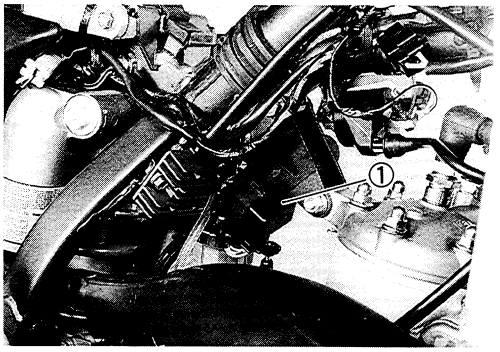

SWITCHES

Measure the continuity of each switch with the pocket tester. If any abnormality is found, replace the respective switch assemblies with new ones.

TOOL 09900-25002: Pocket tester

Tester knob indication: × 1Ω range

IGNITION SWITCH

Position \ Color	R	O
OFF		
ON	○	○

DIMMER SWITCH

Position \ Color	Y/W	W	Y
HI	○		○
LO	○	○	

TURN SIGNAL SWITCH

Position \ Color	Br	P	Dg	B	Lbl	Lg
L	○	○		○	○	
PUSH						
R		○	○		○	○

ENGINE STOP SWITCH

Position \ Color	B/Y	B/W
OFF		
RUN	○	○

HORN BUTTON

Position \ Color	G	B/W
•		
PUSH	○	○

FRONT BRAKE LIGHT SWITCH

Position \ Color	B	B
OFF		
ON	○	○

REAR BRAKE LIGHT SWITCH

Position \ Color	O	W/B
OFF		
ON	○	○

WIRE COLOR

B : Black
Br : Brown
Dg : Dark green
G : Green
Lbl : Light blue
Lg : Light green
O : Orange
P : Pink
R : Red
Y : Yellow
W : White
B/Y : Black with Yellow tracer
B/W : Black with White tracer
W/B : White with Black tracer
Y/W : Yellow with White tracer

SERVICING INFORMATION

CONTENTS

TROUBLESHOOTING 8- 1
WIRING DIAGRAM 8- 8
WIRE, CABLE, AND HOSE ROUTING 8- 9
- WIRE ROUTING 8- 9
- CABLE ROUTING 8-10
- FUEL HOSE ROUTING 8-11
- COOLING SYSTEM HOSE ROUTING 8-12
- FRONT BRAKE HOSE ROUTING 8-14
- REAR BRAKE HOSE ROUTING 8-15

SPECIAL TOOLS 8-16
TIGHTENING TORQUE 8-19
SERVICE DATA 8-20

TROUBLESHOOTING

ENGINE

Complaint	Symptom and possible causes	Remedy
Engine will not start or is hard to start.	**Compression too low**	
	1. Worn cylinder.	Replace.
	2. Worn piston ring.	Replace.
	3. Stiff piston ring.	Repair or replace.
	4. Gas leaks from the joint in crankcase, cylinder, or cylinder head.	Repair or replace.
	5. Damaged read valve.	Replace.
	6. Loose spark plug.	Tighten.
	7. Broken, cracked or damaged piston.	Replace.
	8. Worn crankshaft oil seal.	Replace.
	Spark plug not sparking	
	1. Damaged spark plug.	Replace.
	2. Damaged spark plug cap.	Replace.
	3. Fouled spark plug.	Clean or replace.
	4. Wet spark plug.	Clean and dry or replace.
	5. Defective CDI unit.	Replace.
	6. Defective ignition coil.	Replace.
	7. Defective stator coil.	Replace.
	8. Open or short in high-tension cord.	Replace.
	9. Defective ignition switch.	Replace.
	No fuel reaching the carburetor	
	1. Clogged fuel tank vent hose.	Clean or replace.
	2. Clogged or defective fuel valve.	Clean or replace.
	3. Defective needle valve.	Replace with needle valve seat.
	4. Clogged fuel hose.	Clean or replace.
Engine stalls easily.	1. Fouled spark plug.	Clean or replace.
	2. Defective CDI unit.	Replace.
	3. Defective ignition coil	Replace.
	4. Clogged fuel hose.	Clean.
	5. Clogged carburetor jet.	Clean.
	6. Clogged exhaust pipe.	Clean.

Complaint	Symptom and possible causes	Remedy
Engine is noisy.	**Noise seems to come from the piston**	
	1. Worn piston.	Replace.
	2. Worn cylinder.	Replace.
	3. Carbon build-up in combustion chamber.	Clean.
	4. Worn piston pin, bearing, or piston pin bore.	Replace.
	5. Worn piston ring or ring groove.	Replace.
	Noise seems to come from the clutch	
	1. Worn countershaft spline.	Replace countershaft.
	2. Worn clutch hub spline.	Replace clutch hub.
	3. Worn clutch plate teeth.	Replace clutch plate.
	4. Distorted clutch plate.	Replace.
	Noise seems to come from the crankshaft	
	1. Worn or burnt crankshaft bearing.	Replace.
	2. Worn or burnt big-end bearing.	Replace.
	Noise seems to come from the transmission	
	1. Worn or rubbing gear.	Replace.
	2. Worn countershaft spline.	Replace countershaft.
	3. Worn driveshaft spline.	Replace driveshaft.
	4. Worn driveshaft bearing.	Replace.
	5. Worn countershaft bearing.	Replace.
Clutch slips.	1. Clutch cable out of adjustment.	Adjust.
	2. Weak or broken clutch spring.	Replace.
	3. Worn or distorted clutch pressure plate.	Replace.
	4. Distorted clutch plate.	Replace.
Clutch drags.	1. Clutch out of adjustment.	Adjust.
	2. Some clutch springs are weak, while others are not.	Replace.
	3. Worn or distorted clutch pressure plate.	Replace.
	4. Distorted clutch plate.	Replace.
Transmission will not shift.	1. Broken gearshift shaft return spring.	Replace.
	2. Rubbing or stuck gearshift shaft.	Replace.
Transmission will not shift back.	1. Broken gearshift shaft return spring.	Replace.
	2. Rubbing or stuck gearshift shaft.	Repair or replace.
	3. Worn or distorted gearshift fork.	Replace.
Transmission jumps out of gear.	1. Worn gear.	Replace.
	2. Worn or distorted gearshift fork.	Replace.
	3. Weakened gearshift stopper spring.	Replace.
	4. Worn gearshift pawl.	Replace gearshift fork.

Complaint	Symptom and possible causes	Remedy
Engine idles poorly.	1. Worn cylinder. 2. Worn piston ring. 3. Stiff piston ring. 4. Gas leaks crankshaft oil seal. 5. Excessive spark plug gap. 6. Defective CDI unit. 7. Defective ignition coil. 8. Defective stator coil. 9. Incorrect float chamber fuel level. 10. Clogged carburetor jet. 11. Damaged read valve.	Replace. Replace. Replace. Replace. Adjust or replace. Replace. Replace. Replace. Adjust float height. Clean. Replace.
Engine runs poorly in high-speed range.	1. Worn cylinder. 2. Worn piston ring. 3. Stiff piston ring. 4. Insufficient spark plug gap. 5. Ignition not advanced sufficiently due to poorly working CDI unit. 6. Defective stator coil. 7. Low float chamber fuel level. 8. Dirty air cleaner element. 9. Clogged fuel hose, resulting in inadequate fuel supply to carburetor. 10. Clogged carburetor jet.	Replace. Replace. Replace. Regap or replace. Replace CDI unit. Replace. Adjust float height. Clean or replace. Clean and prime. Clean.
Exhaust smoke is dirty or thick.	1. Incorrect engine oil (in the fuel/oil mixture). 2. Incorrect fuel/oil mixture.	Change. Change.
Engine lacks power.	1. Worn cylinder. 2. Worn piston ring. 3. Gas leaks from crankshaft oil seal. 4. Incorrect spark plug gap. 5. Fouled spark plug. 6. Incorrect spark plug. 7. Clogged carburetor jet. 8. Incorrect float chamber fuel level. 9. Dirty air cleaner element. 10. Air leakage from intake pipe.	Rebore or replace. Replace. Replace. Regap or replace. Clean or replace. Replace. Clean. Adjust float height. Clean or replace. Tighten or replace.
Engine overheats.	1. Carbon build-up on piston crown. 2. Float chamber fuel level too low. 3. Air leakage from intake pipe. 4. Incorrect engine oil (in the fuel/oil mixture). 5. Incorrect spark plug. 6. Clogged exhaust pipe/muffler. 7. Defective cooling system.	Clean. Adjust float height. Tighten or replace. Change. Change. Clean or replace. See radiator section.

RADIATOR

Complaint	Symptom and possible causes	Remedy
Engine overheats.	1. Low engine coolant level. 2. Clogged radiator core. 3. Stuck thermostat (in fully-closed position). 4. Clogged engine coolant passage. 5. Air trapped in the cooling circuit. 6. Defective water pump. 7. Incorrect engine coolant.	Add engine coolant. Clean. Replace. Clean. Bleed. Replace. Change.
Idling or low-speed trouble.	1. Extremely low ambient temperature. 2. Stuck thermostat (in fully-opened position).	Install radiator cover. Replace.

CARBURETOR

Complaint	Symptom and possible causes	Remedy
Starting difficulty.	1. Clogged starter jet. 2. Clogged starter jet pipe. 3. Air leaking from carburetor joint. 4. Improperly working starter valve.	Clean. Clean. Tighten or replace defective part. Check and adjust.
Idling or low-speed trouble.	1. Clogged or loose pilot jet. 2. Air leaking from carburetor joint. 3. Improperly adjusted pilot air screw.	Clean or tighten. Tighten or replace defective part. Adjust.
Medium-or high speed trouble.	1. Clogged main jet. 2. Clogged needle jet. 3. Incorrect float chamber fuel level. 4. Improperly working throttle valve. 5. Clogged fuel filter.	Clean. Clean. Adjust float height. Adjust. Clean or replace.
Overflow and fuel level fluctuations.	1. Worn or damaged needle valve. 2. Broken needle valve spring. 3. Improperly working float. 4. Foreign matter on the needle valve. 5. Incorrect float chamber fuel level. 6. Clogged carburetor air vent hose.	Replace. Replace. Adjust or replace. Clean or replace with needle valve seat. Adjust float height. Clean

CHASSIS

Complaint	Symptom and possible causes	Remedy
Steering is heavy.	1. Overtightened steering stem nut. 2. Broken bearing/race in steering stem. 3. Distorted steering stem. 4. Low tire pressure.	Adjust. Replace. Replace. Regulate.
Handlebar wobbles.	1. Loss of balance between right and left front forks. 2. Distorted front fork. 3. Distorted front axle. 4. Twisted tire.	Adjust or replace. Repair or replace. Replace. Replace.

Complaint	Symptom and possible causes	Remedy
Front wheel wobbles.	1. Distorted wheel rim. 2. Worn front wheel bearing. 3. Defective or incorrect tire. 4. Loose front axle nut. 5. Loose front axle pinch bolt. 6. Incorrect fork oil level.	Replace. Replace. Replace. Tighten. Tighten. Adjust.
Front suspension too soft.	1. Weak spring. 2. Insufficient fork oil. 3. Improper suspension setting.	Replace. Check level and add. Adjust.
Front suspension too stiff.	1. Excessively viscous fork oil. 2. Excessive fork oil. 3. Improper suspension setting.	Replace. Check level and drain. Adjust.
Front suspension too noisy.	1. Insufficient fork oil. 2. Loose front suspension fastener.	Check level and add. Tighten.
Rear wheel wobbles.	1. Distorted wheel rim. 2. Worn rear wheel bearing. 3. Defective or incorrect tire. 4. Worn swingarm bearing. 5. Worn rear suspension bush. 6. Loose rear suspension fastener.	Replace. Replace. Replace. Replace. Replace. Tighten.
Rear suspension too soft.	1. Weak rear shock absorber spring. 2. Rear shock absorber leaks oil. 3. Improper suspension setting.	Replace. Replace. Adjust.
Rear suspension too stiff.	1. Improper suspension setting. 2. Bent rear shock absorber shaft. 3. Bent swingarm. 4. Worn swingarm and rear suspension related bearings.	Adjust. Replace. Replace. Replace.
Rear suspension too noisy.	1. Loose rear suspension fastener. 2. Worn rear suspension bush. 3. Worn swingarm bearing.	Tighten. Replace. Replace.

BRAKES

Complaint	Symptom and possible causes	Remedy
Brake power insufficient.	1. Leakage of brake fluid. 2. Worn brake pad. 3. Oil on brake pad surface. 4. Worn brake disc. 5. Air in hydraulic system.	Repair or replace. Replace. Clean brake disc and brake pads. Replace. Bleed.

Complaint	Symptom and possible causes	Remedy
Brake squeaks.	1. Carbon adhesion on brake pad surface. 2. Tilted brake pad. 3. Damaged wheel bearing. 4. Worn brake pad. 5. Foreign material in brake fluid. 6. Clogged return port of master cylinder. 7. Loose front or rear axle nut.	Clean surface with sandpaper. Readjust brake pad position or replace. Replace. Replace. Change brake fluid. Disassemble and clean master cylinder. Tighten.
Brake lever or pedal stroke excessive.	1. Air in hydraulic system. 2. Insufficient brake fluid. 3. Incorrect brake fluid.	Bleed. Check level and add. Bleed any air. Change.
Brake fluid leaks.	1. Loose connection joint. 2. Cracked hose. 3. Worn piston seal. 4. Worn secondary cup.	Tighten. Replace. Replace. Replace.
Brake drags.	1. Rusty part. 2. Insufficient brake lever or brake pedal pivot lubrication.	Clean and lubricate. Lubricate.

ELECTRICAL

Complaint	Symptom and possible causes	Remedy
No sparking or poor sparking.	1. Defective ignition coil. 2. Defective spark plug. 3. Defective pick-up coil. 4. Defective stator coil. 5. Defective CDI unit.	Replace. Replace. Replace. Replace. Replace.
Spark plug is wet or quickly becomes fouled with carbon.	1. Excessively rich air/fuel mixture. 2. Excessively high idling speed. 3. Incorrect gasoline. 4. Dirty air cleaner element. 5. Incorrect spark plug (cold type). 6. Incorrect engine oil	Adjust carburetor. Adjust carburetor. Change. Clean or replace. Change to hot type spark plug. Change.
Spark plug quickly becomes fouled with oil or carbon.	1. Worn piston ring. 2. Worn piston. 3. Worn cylinder.	Replace. Replace. Replace.
Spark plug electrodes overheat or burn.	1. Incorrect spark plug (hot type). 2. Overheated engine. 3. Loose spark plug. 4. Excessively lean air/fuel mixture.	Change to cold type spark plug. Tune-up. Tighten. Adjust carburetor.

WIRING DIAGRAM

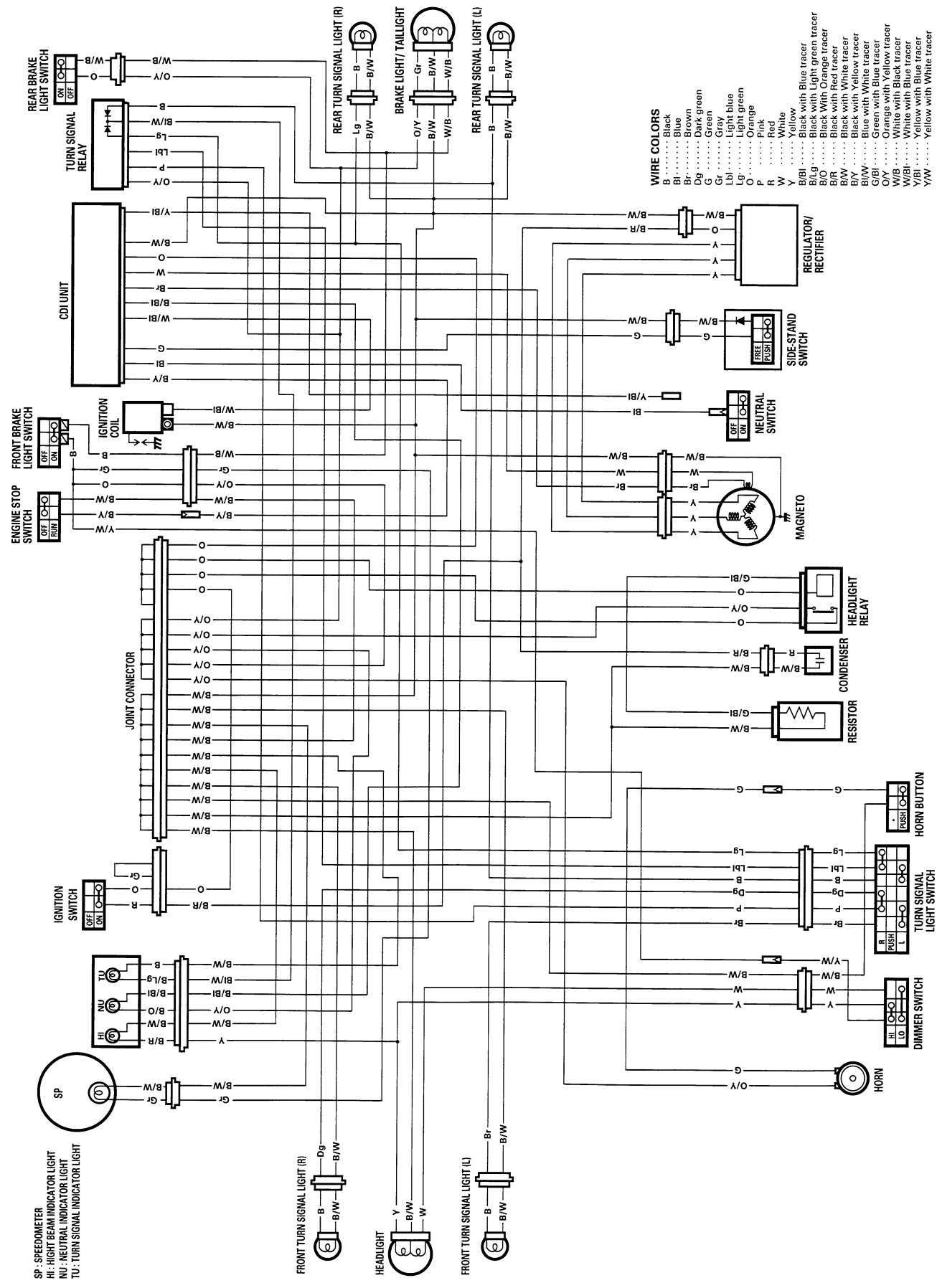

WIRE, CABLE, AND HOSE ROUTING

WIRE ROUTING

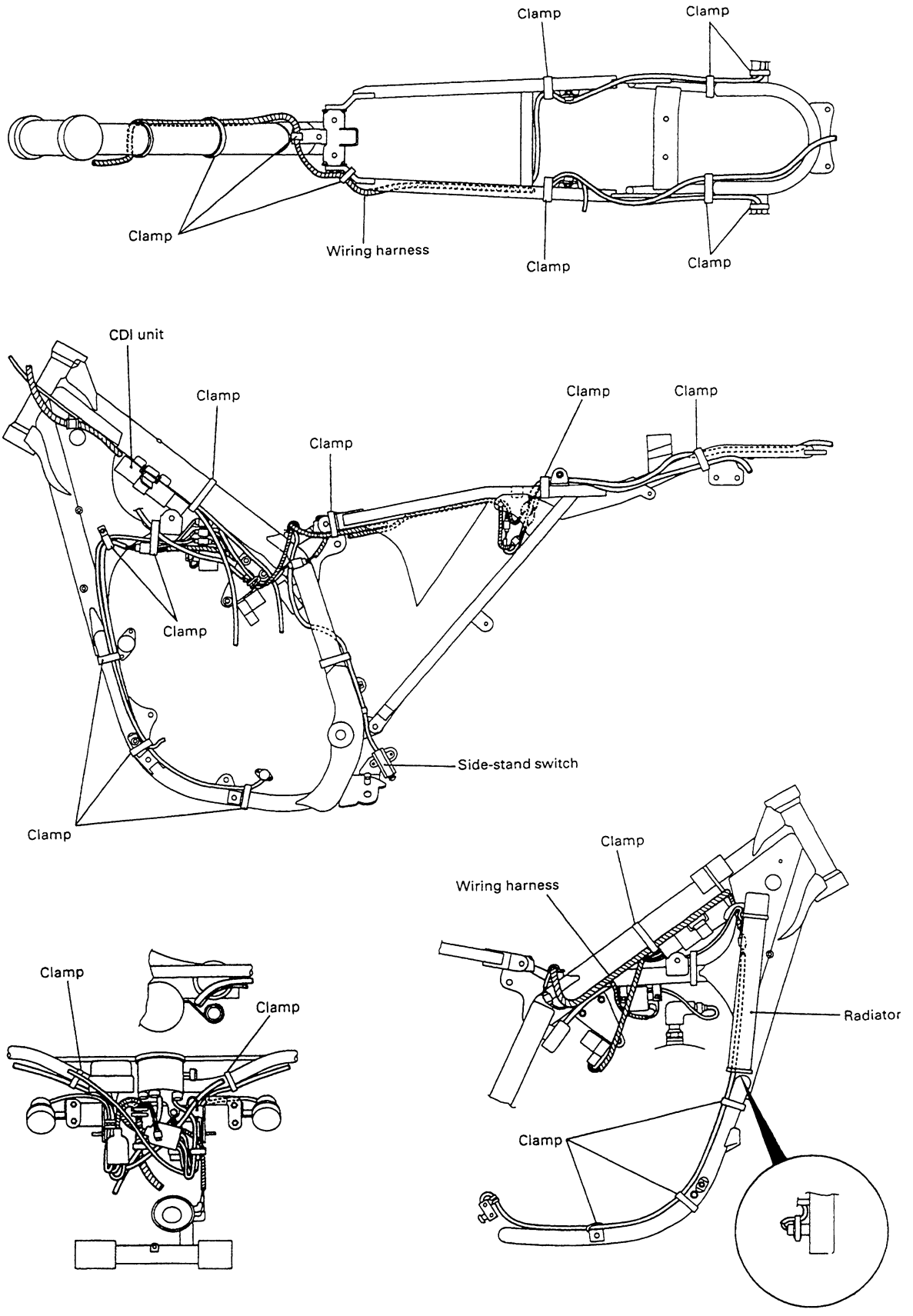

CABLE ROUTING

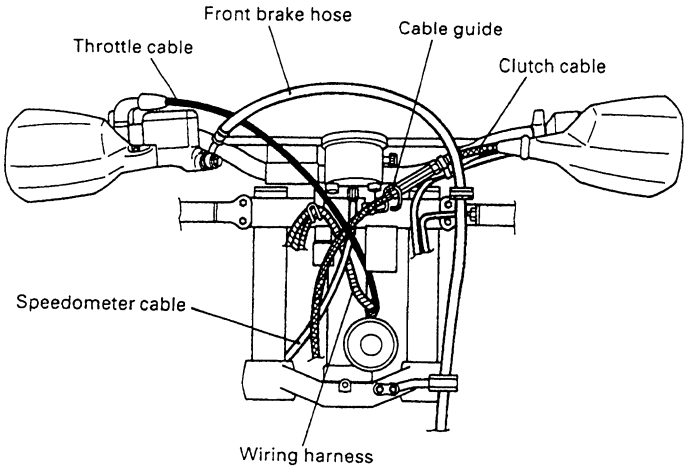

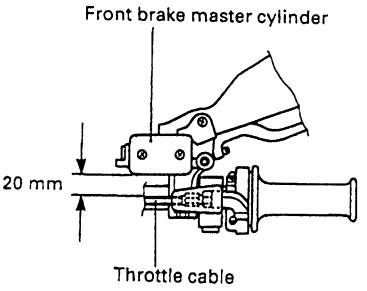

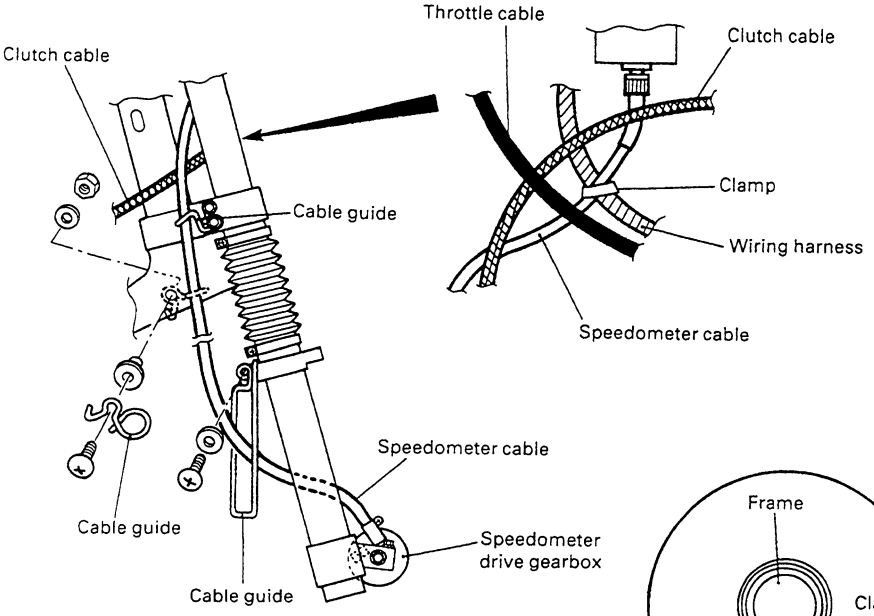

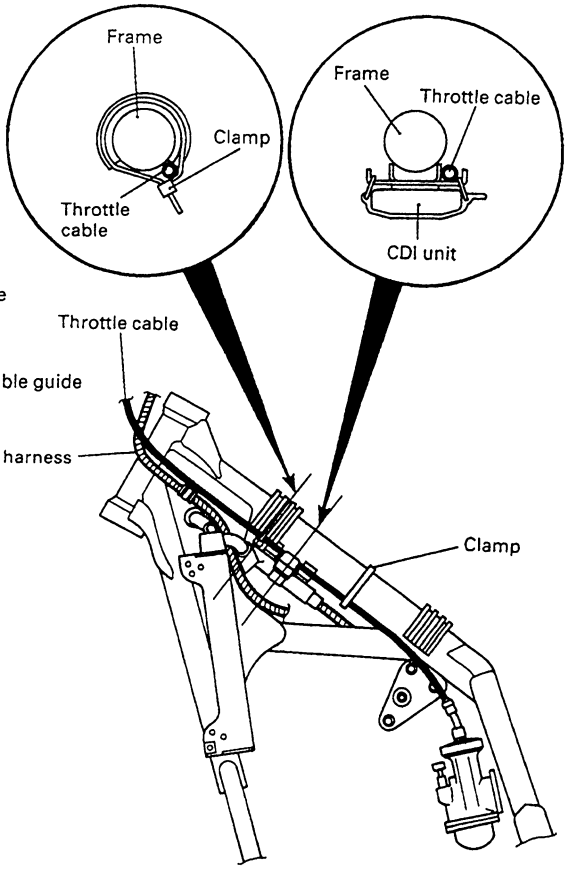

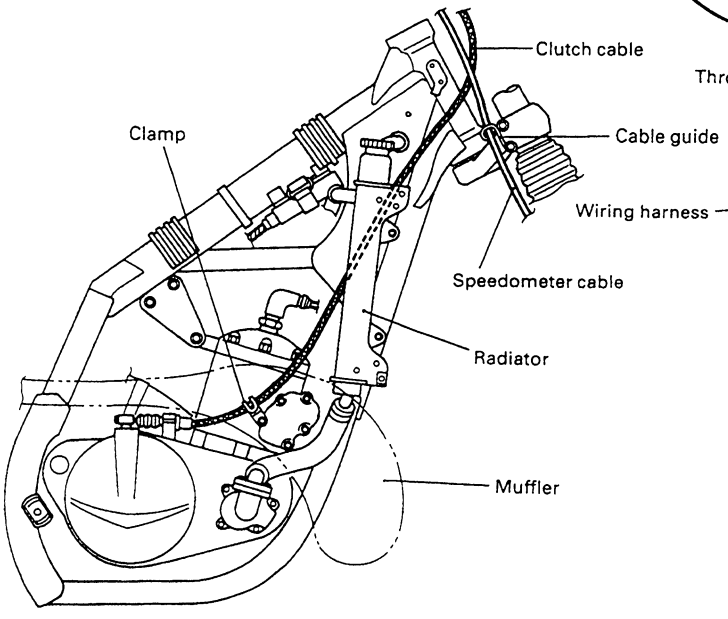

FUEL HOSE ROUTING

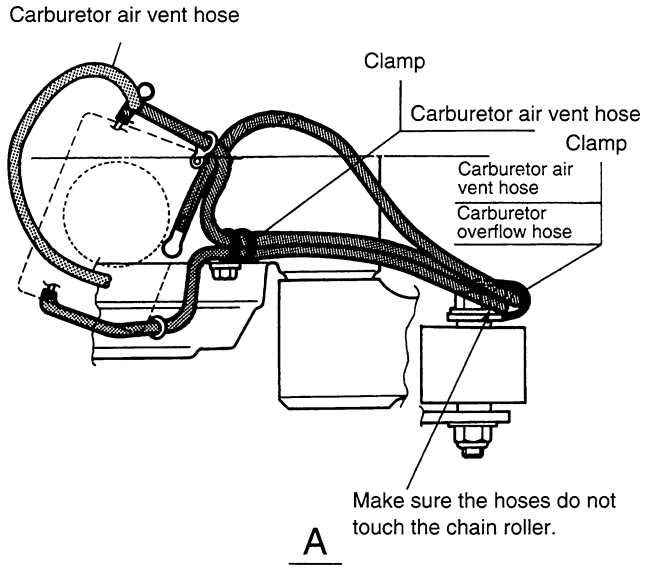

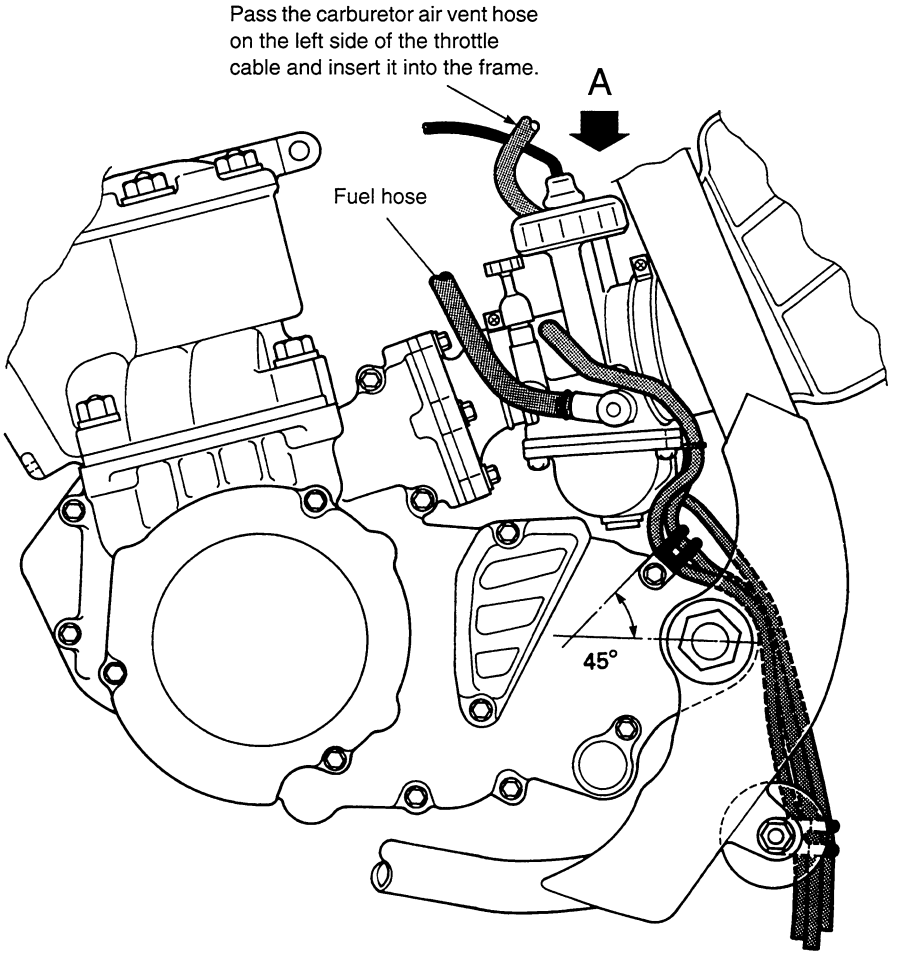

COOLING SYSTEM HOSE ROUTING

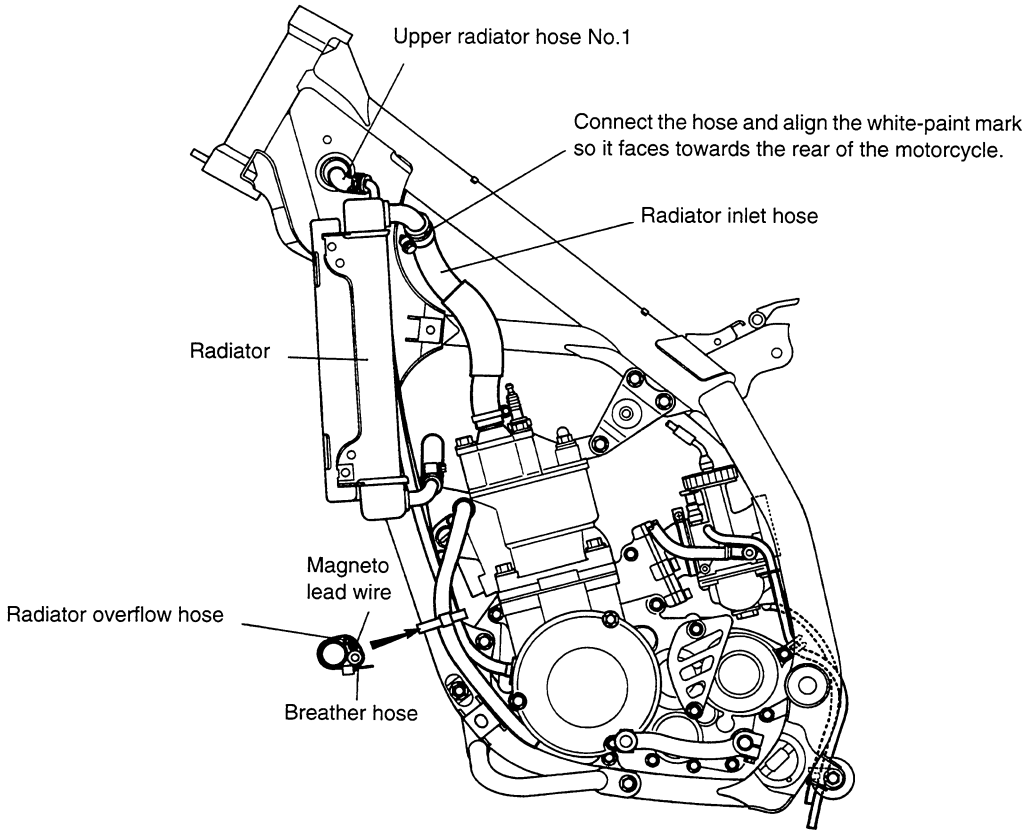

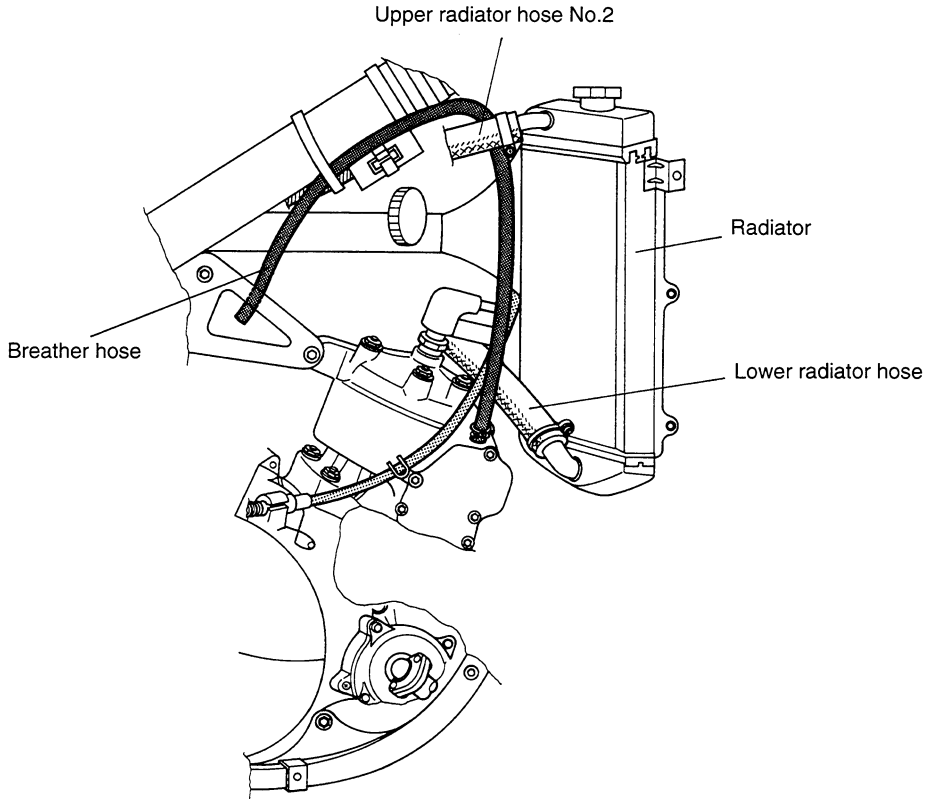

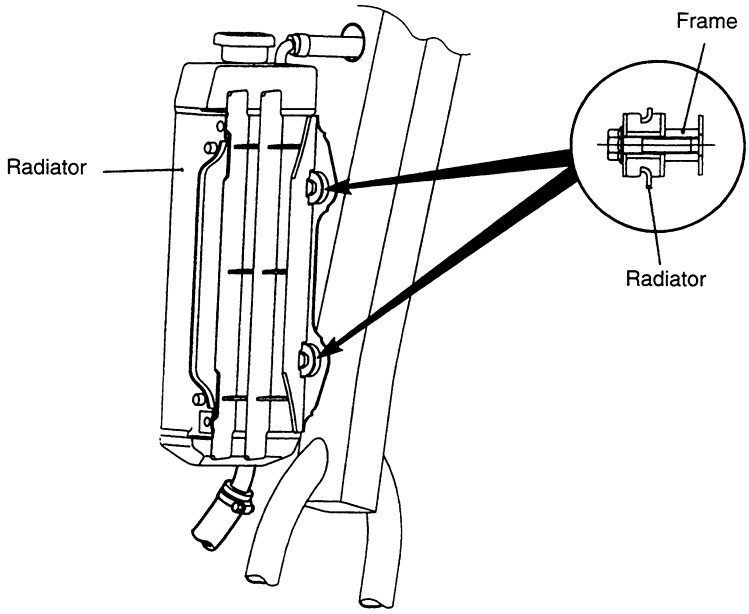
Frame
Radiator
Radiator

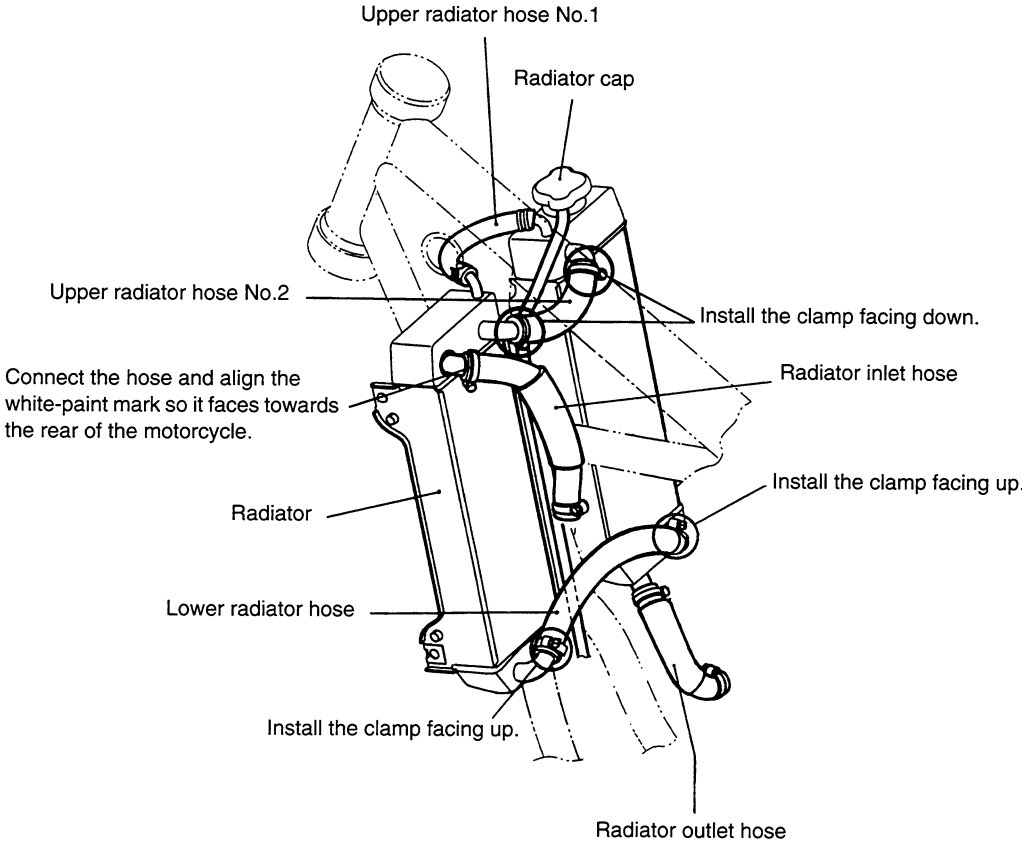
Upper radiator hose No.1
Radiator cap
Upper radiator hose No.2
Install the clamp facing down.
Connect the hose and align the white-paint mark so it faces towards the rear of the motorcycle.
Radiator inlet hose
Install the clamp facing up.
Radiator
Lower radiator hose
Install the clamp facing up.
Radiator outlet hose

FRONT BRAKE HOSE ROUTING

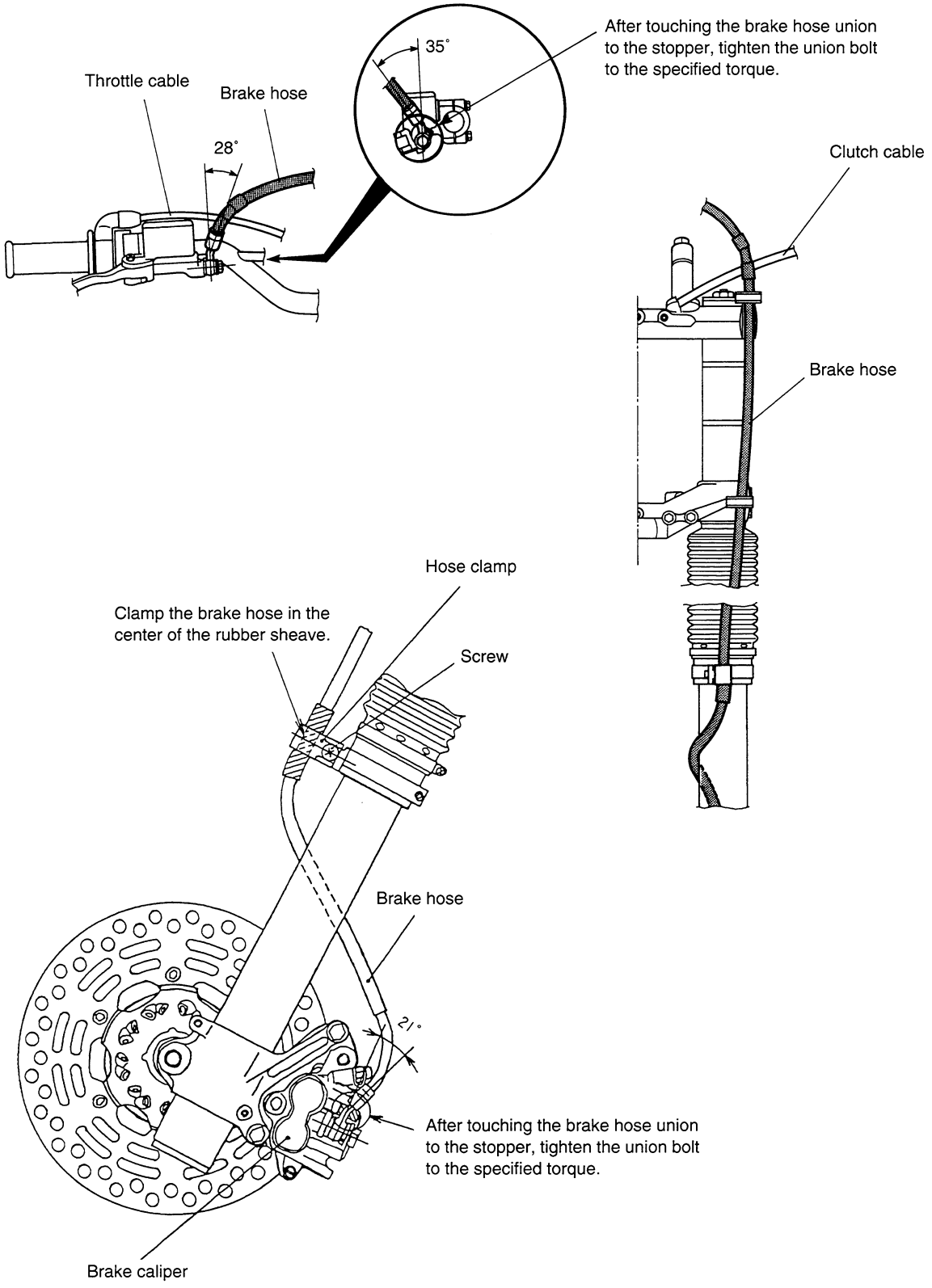

REAR BRAKE HOSE ROUTING

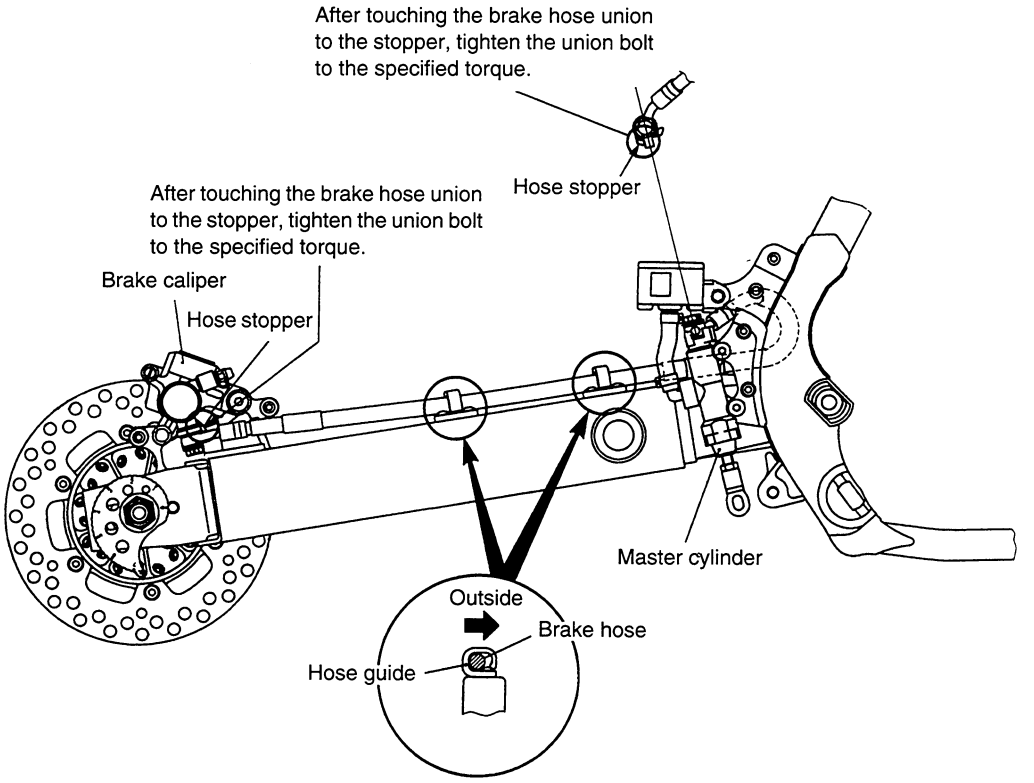

SPECIAL TOOLS

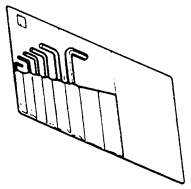 09900-00401 Hexagon wrench set	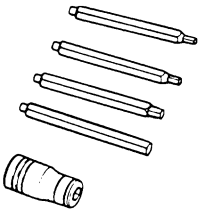 09900-00410 Hexagon wrench set	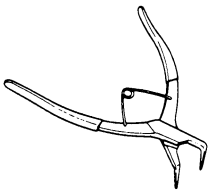 09900-06104 Snap ring pliers	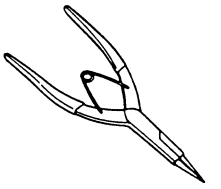 09900-06105 Snap ring pliers	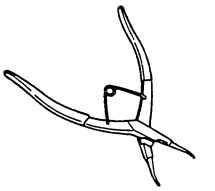 09900-06108 Snap ring pliers
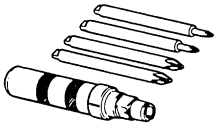 09900-09004 Impact driver set	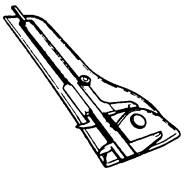 09900-20102 Vernier calipers (1/20 mm, 200 mm)	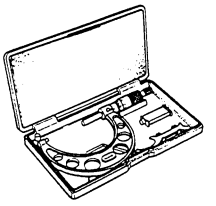 09900-20203 Micrometer (1/100 mm, 50–75 mm)	09900-20205 Micrometer (1/1000 mm, 0–25 mm)	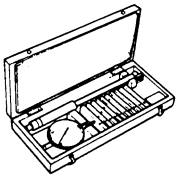 09900-20508 Cylinder gauge set (1/100 mm, 40–80 mm)
09900-20602 Dial gauge (1/1000 mm)	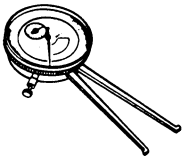 09900-20605 Dial calipers (1/100 mm, 10–34 mm)	09900-20606 Dial gauge (1/100 mm)	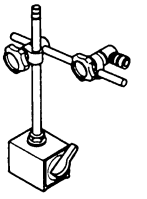 09900-20701 Magnetic stand	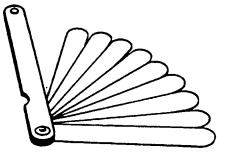 09900-20803 Thickness gauge
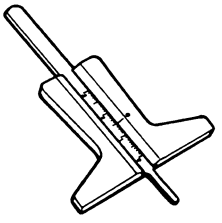 09900-20805 Tire depth gauge	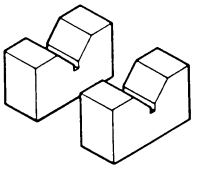 09900-21304 V-block set (100 mm)	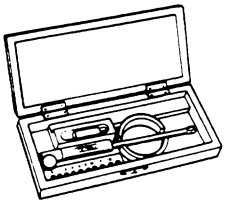 09900-22401 Small bore gauge (10–18 mm)	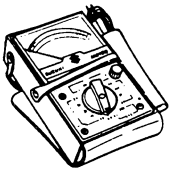 09900-25002 Pocket tester	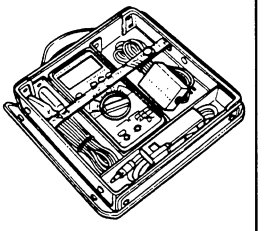 09900-25008 Multi circuit tester set
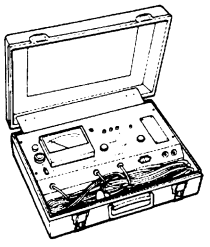 09900-28108 Electro tester	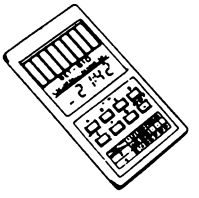 09900-26006 Tachometer	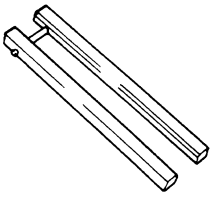 09910-20116 Conrod holder	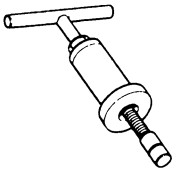 09910-32812 Crankshaft installer	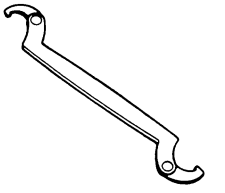 09910-60611 Universal clamp wrench

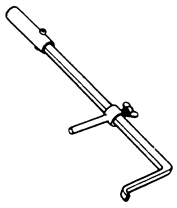 09913-50121 Oil seal remover	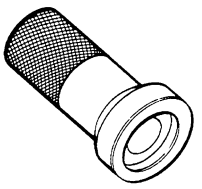 09913-70122 Bearing installer	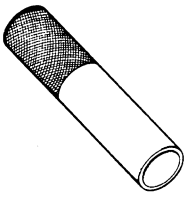 09913-84510 Bearing installer	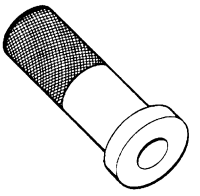 09913-85210 Bearing installer	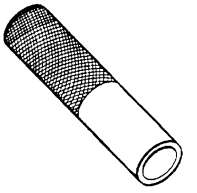 09913-80112 Bearing installer
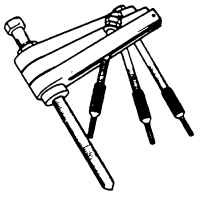 09920-13120 Crankcase separating tool	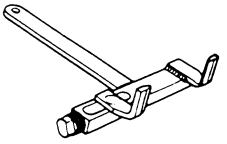 09920-53740 Clutch sleeve hub holder	09923-73210 Bearing remover	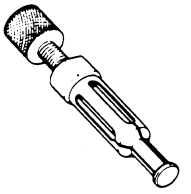 09923-74510 Bearing remover (20–35 mm)	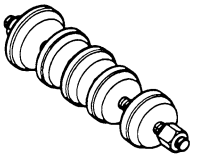 09924-84511 Bearing installer set
09924-84521 Bearing installer set	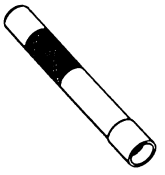 09925-18010 Steering bearing installer	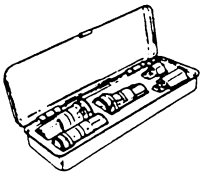 09930-10121 Spark plug wrench set	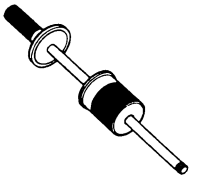 09930-30102 Sliding shaft	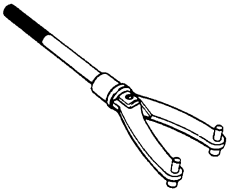 09930-30113 Flywheel rotor remover
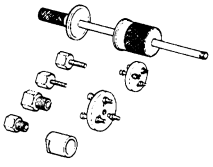 09930-30133 Rotor remover set	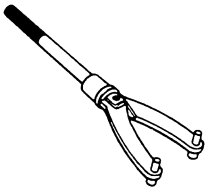 09930-40113 Rotor holder	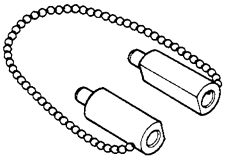 09930-40131 Rotor holder attachment	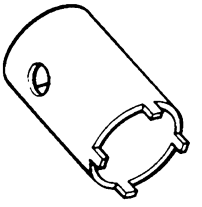 09940-14911 Steering stem nut wrench	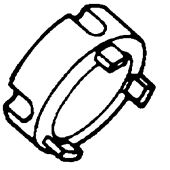 09940-14960 Steering stem nut wrench socket
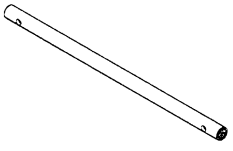 09940-52841 Front fork inner rod holder	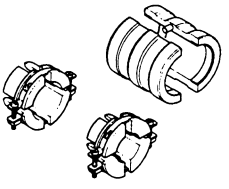 09940-52861 Front fork oil seal installer	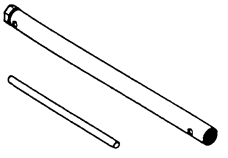 09940-52890 Front fork assembly tool	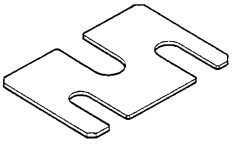 09940-94922 Stopper plate	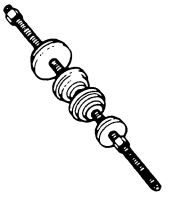 09941-34513 Bearing installer

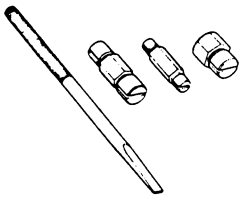 09941-50111 Bearing remover	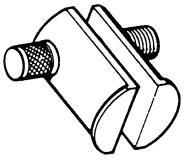 09941-54911 Bearing outer race remover	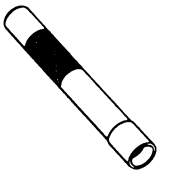 09941-74910 Bearing installer	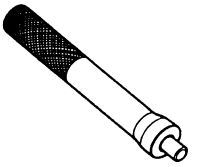 09943-88211 Bearing remover/ installer	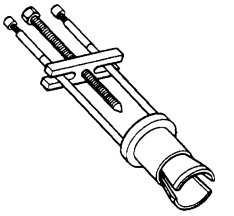 09941-84510 Bearing remover
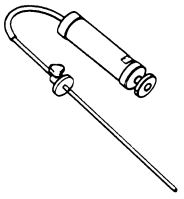 09943-74111 Fork oil level gauge	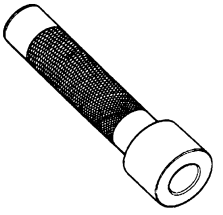 09922-55131 Bearing installer			

TIGHTENING TORQUE

ENGINE

ITEM	N·m	kg-m	lb-ft
Cylinder head nut	28	2.8	20.0
Spark plug	28	2.8	20.0
Cylinder nut	38	3.8	27.5
Magneto rotor nut	80	8.0	58.0
Clutch sleeve hub nut	90	9.0	65.0
Primary drive gear nut	90	9.0	65.0
Exhaust valve arm bolt	10	1.0	7.0
Engine mounting nut (front upper)	41	4.1	29.5
Engine mounting nut (lower)	41	4.1	29.5

CHASSIS

ITEM	N·m	kg-m	lb-ft
Handlebar clamp bolt	26	2.6	19.0
Handlebar holder nut	45	4.5	32.5
Front fork upper clamp bolt	26	2.6	19.0
Front fork lower clamp bolt	26	2.6	19.0
Steering stem head nut	90	9.0	65.0
Steering stem nut	45	4.5	32.5
Front fork cap bolt	23	2.3	16.5
Front fork center bolt	80	8.0	58.0
Front fork piston rod locknut	22	2.2	16.0
Front brake master cylinder mounting bolt	10	1.0	7.0
Rear brake master cylinder mounting bolt	10	1.0	7.0
Brake hose union bolt (front & rear)	23	2.3	16.5
Brake caliper mounting bolt (front & rear)	26	2.6	19.0
Brake pad mounting pin (front & rear)	18	1.8	13.0
Brake air bleeder valve (front & rear)	8	0.8	6.0
Rear brake pedal bolt	29	2.9	21.0
Brake disc bolt (front & rear)	10	1.0	7.0
Front axle	65	6.5	47.0
Front axle holder bolt	18	1.8	13.0
Engine mounting plate nut (upper & front)	44	4.4	32.0
Seat rail mounting bolt (upper)	26	2.6	19.0
Seat rail mounting bolt (lower)	23	2.3	16.5
Rear axle nut	110	11.0	79.5
Rear sprocket nut	28	2.8	20.0
Drive chain roller mounting bolt	41	4.1	29.5
Spoke nipple (front & rear)	2.5	0.25	1.8
Swingarm pivot nut	79	7.9	57.0

ITEM	N·m	kg-m	lb-ft
Rear shock absorber mounting nut (upper & lower)	55	5.5	40.0
Cushion lever mounting nut (center)	100	10.0	72.5
Cushion lever mounting nut (front)	80	8.0	58.0
Cushion rod mounting nut	100	10.0	72.5

TIGHTENING TORQUE CHART

For other bolts and nuts not listed in the preceding page, refer to this chart:

Bolt Diameter Ⓐ (mm)	Conventional or "4" marked bolt			"7" marked bolt		
	N·m	kg-m	lb-ft	N·m	kg-m	lb-ft
4	1.5	0.15	1.0	2	0.2	1.5
5	3	0.3	2.0	5	0.5	3.5
6	6	0.6	4.5	10	1.0	7.0
8	13	1.3	9.5	23	2.3	16.5
10	29	2.9	21.0	50	5.0	36.0
12	45	4.5	32.5	85	8.5	61.5
14	65	6.5	47.0	135	13.5	97.5
16	105	10.5	76.0	210	21.0	152.0
18	160	16.0	115.5	240	24.0	173.5

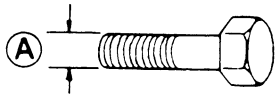

Conventional bolt

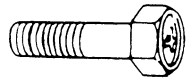

"4" marked bolt

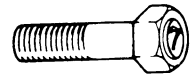

"7" marked bolt

SERVICE DATA

CYLINDER + PISTON + PISTON RING

Unit: mm (in)

ITEM	STANDARD	LIMIT
Piston-to-cylinder clearance	0.050–0.080 (0.0020–0.0031)	0.120 (0.0047)
Cylinder bore	67.000–67.015 (2.6377–2.6384) Measure 20 (0.8) from the top surface	—
Piston diameter	66.950–66.965 (2.6358–2.6364) Measure 24 (0.9) from the skirt end	66.880 (2.6331)
Cylinder distortion	—	0.05 (0.002)
Cylinder head distortion	—	0.05 (0.002)
Piston ring end gap	0.20–0.40 (0.008–0.016)	0.85 (0.033)
Piston-ring-to-piston-ring-groove clearance	0.020–0.060 (0.0008–0.0024)	—
Piston pin bore	18.000–18.006 (0.7087–0.7089)	18.030 (0.7098)
Piston pin O.D.	17.995–18.000 (0.7085–0.7087)	17.980 (0.7079)

CONROD + CRANKSHAFT

Unit: mm (in)

ITEM	STANDARD	LIMIT
Conrod small end I.D.	23.003–23.011 (0.9056–0.9059)	23.040 (0.9071)
Crank-web-to-crank-web width	58.0±0.1 (2.283±0.004)	—
Crankshaft runout	—	0.05 (0.002)

CLUTCH

Unit: mm (in)

ITEM	STANDARD	LIMIT
Clutch cable play	10–15 (0.4–0.6)	—
Clutch drive plate thickness	2.7–2.9 (0.106–0.114)	2.4 (0.094)
Clutch drive plate claw width	15.8–16.0 (0.62–0.63)	15.3 (0.60)
Clutch drive plate distortion	—	0.10 (0.004)
Clutch spring free length	—	45.5 (1.79)

RADIATOR

Unit: mm (in)

ITEM	STANDARD	LIMIT
Radiator cap valve release pressure	110 kPa (1.1 kg/cm^2, 16 psi)	—

TRANSMISSION

Unit: mm (in) Except ratio

ITEM		STANDARD	LIMIT
Primary reduction ratio		2.652 (61/23)	—
Final reduction ratio		3.846 (50/13)	—
Gear ratios	Low	2.285 (32/14)	—
	2nd	1.733 (26/15)	—
	3rd	1.375 (22/16)	—
	4th	1.090 (24/22)	—
	Top	0.863 (19/22)	—
Gearshift-fork-to-gearshift-fork-groove clearance		0.1–0.3 (0.004–0.012)	0.5 (0.02)
Gearshift fork groove width		4.8–4.9 (0.189–0.193)	—
Gearshift fork thickness		4.6–4.7 (0.181–0.185)	—

DRIVE CHAIN

Unit: mm (in) Except ratio

ITEM	STANDARD		LIMIT
Drive chain	Type	RK520SMOZ9	—
	Links	114	—
	20-pitch length	—	319.4 (12.57)
Drive chain slack	45–55 (1.8–2.2)		—

CARBURETOR

ITEM		SPECIFICATION
Carburetor type		KEIHIN PJ38
Bore size		38 mm
I.D. No.		44E2
Idle r/min.		1 150–1 250
Float height		16.0±1.0 mm (0.63±0.04 in)
Main jet	(M.J.)	#175
Main air jet	(M.A.J.)	#200
Jet needle	(J.N.)	R1472L1L-2nd
Cut-away	(C.A.)	#5
Slow jet	(S.J.)	#55
By-pass	(B.P.)	0.8 mm (0.031 in)
Pilot outlet	(P.O.)	0.7 mm (0.028 in)
Air screw	(A.S.)	1 turn out
Throttle cable play		3.0–6.0 mm (0.12–0.24 in) at the throttle grip

BRAKE + WHEEL

Unit: mm (in)

ITEM		STANDARD	LIMIT
Brake lever play		0.1–0.3 (0.004–0.01)	—
Rear brake pedal play		5–15 (0.2–0.6)	—
Rear brake pedal height		0–10 (0–0.4)	—
Brake disc thickness	Front	3.0±0.2 (0.118±0.008)	2.5 (0.10)
	Rear	4.5±0.2 (0.177±0.008)	4.0 (0.16)
Brake disc runout	Front & Rear	—	0.30 (0.01)
Master cylinder bore	Front	12.700–12.743 (0.5000–0.5017)	—
	Rear	12.700–12.743 (0.5000–0.5017)	—
Master cylinder piston diameter	Front	12.657–12.684 (0.4983–0.4994)	—
	Rear	12.657–12.684 (0.4983–0.4994)	—
Brake caliper cylinder bore	Front	27.000–27.050 (1.0630–1.0650)	—
	Rear	27.000–27.050 (1.0630–1.0650)	—
Brake caliper piston diameter	Front	26.900–26.950 (1.0591–1.0610)	—
	Rear	26.900–26.950 (1.0591–1.0610)	—
Wheel rim runout	Axial	—	2.0 (0.08)
	Radial	—	2.0 (0.08)
Wheel axle runout	Front	—	0.25 (0.010)
	Rear	—	0.25 (0.010)
Tire size	Front	3.00–21 51P	—
	Rear	120/90–18 65P	—
Tire tread depth	Front	—	4.0 (0.16)
	Rear	—	4.0 (0.16)

SUSPENSION

Unit: mm (in)

ITEM	STANDARD	LIMIT	NOTE
Front fork stroke	297 (11.6)	—	
Front fork spring free length	—	525.5 (20.7)	
Front fork spring rate	7.65 N/mm (0.78 kgf/mm)	—	
Front fork oil level	109 (4.3)	—	
Front fork air pressure	0 kPa (0 kg/cm^2, 0 psi)	—	
Rear shock absorber gas pressure	1000 kPa (10 kg/cm^2, 142 psi)	—	
Rear shock absorber spring rate	44.1 N/mm (4.5 kgf/mm)	—	
Rear shock absorber spring pre-set length	263.8 (10.4)	—	
Rear wheel travel	314 (12.3)	—	
Swingarm pivot shaft runout	—	0.3 (0.01)	

TIRE PRESSURE

Front & Rear	150 kPa 1.50 kg/cm^2 22 psi

ELECTRICAL

Unit: mm (in)

ITEM	SPECIFICATION		NOTE
Ignition timing	4.0°B.T.D.C. at 1 500 r/min.		
Spark plug	Type	NGK: BR9EV	
	Gap	0.5–0.6 (0.020–0.024)	
Spark performance	Over 8 (0.3) at 1 atm.		
Ignition coil resistance	Primary	0–1 Ω	Terminal–Ground
	Secondary	15–18 kΩ	Plug cap–Ground
Magneto coil resistance	Pick-up coil	81–121 Ω	Br–W
	Charging coil	0.6–0.7 Ω	Y–Y
Regulated voltage	13.5–14.5 V at 5 000 r/min.		

WATTAGE

Unit: W

ITEM		SPECIFICATION
Headlight	HI	60
	LO	55
Brake light/taillight		5/21
Turn signal lights		21
Speedometer light		1.7
Turn signal indicator light		2.0
High beam indicator light		2.0
Neutral indicator light		2.0

FUEL + OIL + COOLANT

ITEM	SPECIFICATION		NOTE
Fuel type	Unleaded gasoline minimum 95 octane (RON)		
Fuel tank capacity	Including reserve	11.5 L (3.0/2.5 US/Imp gal)	
	Reserve only	2.5 L (0.7/0.5 US/Imp gal)	
Engine oil type	B.P. RACING 2T-R SHELL SPORTS SX MOTUL 800 2T CASTROL A747		
Transmission oil type	SAE 10W/40		
Transmission oil capacity	Change	650 ml (0.7/0.6 US/Imp qt)	
	Overhaul	750 ml (0.8/0.7 US/Imp qt)	
Front fork oil type	SUZUKI fork oil SS-05 or an equivalent fork oil		
Front fork oil capacity (each leg)	639 ml (21.6/22.5 US/Imp oz)		
Coolant type	Use an anti-freeze & summer coolant compatible with aluminum radiator, mixed with distilled water only, at the ratio of 50 : 50		
Coolant capacity	1 170 ml (1.3/1.1 US/Imp qt)		
Rear shock absorber oil type	SUZUKI Rear suspension oil SS-25 or an equivalent rear suspension oil		
Rear shock absorber oil capacity	345 ml (11.7/12.1 US/Imp qt)		
Brake fluid type	DOT 4		

RMX250SX ('99-MODEL)

CONTENTS

SPECIFICATIONS 9- 1
SERVICE DATA 9- 2

SPECIFICATIONS

DIMENSIONS AND DRY MASS

Overall length	2 260 mm (89.0 in)
Overall width	880 mm (34.6 in)
Overall height	1 275 mm (50.2 in)
Wheelbase	1 480 mm (58.3 in)
Ground clearance	325 mm (12.8 in)
Seat height	945 mm (37.2 in)
Dry mass	113 kg (249 lbs)

ENGINE

Type	Two-stroke, liquid-cooledIntake system
	Crankcase reed valve
Number of cylinders	1
Bore	67.0 mm (2.637 in)
Stroke	70.8 mm (2.787 in)
Displacement	249 cm^3 (15.2 cu. in)
Compression ratio	8.3 : 1/10.3 : 1
Carburetor	KEIHIN PJ38, single
Air cleaner	Polyurethane foam element
Starter system	Primary kick
Lubrication system	Fuel/oil premixture of 32 : 1

TRANSMISSION

Clutch	Wet multi-plate type
Transmission	5-speed constant mesh
Gearshift pattern	1-down, 4-up
Primary reduction ratio	2.652 (61/23)
Gear ratios, 1st (low)	2.285 (32/14)
2nd	1.733 (26/15)
3rd	1.375 (22/16)
4th	1.090 (24/22)
5th (top)	0.863 (19/22)
Final reduction ratio	3.846 (50/13)
Drive chain	RK520SMOZ9, 114 links

CHASSIS

Front suspension	Telescopic, coil spring, oil damped, spring preload fully adjustable, compression damping force 18-way adjustable, rebound damping force 14-way adjustable
Rear suspension	Link type, gas/coil spring, oil damped, spring preload fully adjustable, compression damping force 21-way adjustable, rebound damping force 26-way adjustable
Caster	28°
Trail	111 mm (4.4 in)
Steering angle	45° (right & left)
Turning radius	2.3 m (7.5 ft)
Front brake	Disc
Rear brake	Disc
Front tire size	3.00-21 51P, tube
Rear tire size	120/90-18 65P, tube

ELECTRICAL

Ignition type	Electronic ignition (CDI)
Ignition timing	4° B.T.D.C. at 1 500 r/min
Spark plug	NGK BR9EV
Generator	Flywheel magneto
Headlight	12V 60/55W
Turn signal light	12V 21W
Brake light/taillight	12V 21/5W
Speedometer light	12V 1.7W
Neutral indicator light	12V 2W
High beam indicator light	12V 2W
Turn signal indicator light	12V 2W

CAPACITIES

Fuel tank including reserve	11.5 L (3.0/2.5 US/Imp gal)
Reserve	2.5 L (0.7/0.5 US/Imp gal)
Transmission oil	650 ml (0.7/0.6 US/Imp qt)
Engine coolant	1.2 L (1.3/1.1 US/Imp qt)

* These specifications are subject to change without notice.

SERVICE DATA

CYLINDER + PISTON + PISTON RING

Unit: mm (in)

ITEM	STANDARD	LIMIT
Piston-to-cylinder clearance	0.050–0.080 (0.0020–0.0031)	0.120 (0.0047)
Cylinder bore	67.000–67.015 (2.6377–2.6384) Measure 20 (0.8) from the top surface.	———
Piston diameter	66.950–66.965 (2.6358–2.6364) Measure 24 (0.9) from the skirt end.	66.880 (2.6331)
Cylinder distortion	———	0.05 (0.002)
Cylinder head distortion	———	0.05 (0.002)
Piston ring end gap	0.20–0.40 (0.008–0.016)	0.85 (0.033)
Piston-ring-to-piston-ring-groove clearance	0.020–0.060 (0.0008–0.0024)	———
Piston pin bore	18.000–18.006 (0.7087–0.7089)	18.030 (0.7098)
Piston pin O.D.	17.995–18.000 (0.7085–0.7087)	17.980 (0.7079)

CONROD + CRANKSHAFT

Unit: mm (in)

ITEM	STANDARD	LIMIT
Conrod small end I.D.	23.003–23.011 (0.9056–0.9059)	23.040 (0.9071)
Crank-web-to-crank-web width	58.0 ± 0.1 (2.283 ± 0.004)	———
Crankshaft runout	———	0.05 (0.002)

CLUTCH

Unit: mm (in)

ITEM	STANDARD	LIMIT
Clutch cable play	10–15 (0.4–0.6)	———
Clutch drive plate thickness	2.7–2.9 (0.106–0.114)	2.4 (0.094)
Clutch drive plate claw width	15.8–16.0 (0.62–0.63)	15.3 (0.60)
Clutch driven plate distortion	———	0.10 (0.004)
Clutch spring free length	———	45.5 (1.79)

RADIATOR

ITEM	STANDARD	LIMIT
Radiator cap valve release pressure	110 kPa (1.1 kg/cm^2, 16 psi)	———

TRANSMISSION

Unit: mm (in) Except ratio

ITEM		STANDARD	LIMIT
Primary reduction ratio		2.652 (61/23)	———
Final reduction ratio		3.846 (50/13)	———
Gear ratios	Low	2.285 (32/14)	———
	2nd	1.733 (26/15)	———
	3rd	1.375 (22/16)	———
	4th	1.090 (24/22)	———
	Top	0.863 (19/22)	———
Gearshift-fork-to-gearshift-fork-groove clearance		0.1–0.3 (0.004–0.012)	0.5 (0.02)
Gearshift fork groove width		4.8–4.9 (0.189–0.193)	———
Gearshift fork thickness		4.6–4.7 (0.181–0.185)	———

DRIVE CHAIN

Unit: mm

ITEM	STANDARD		LIMIT
Drive chain	Type	RK520SMOZ9	———
	Links	114	———
	20-pitch length	———	319.4 (12.57)
Drive chain slack	45–55 (1.8–2.2)		———

CARBURETOR

ITEM		SPECIFICATION
Carburetor type		KEIHIN PJ38
Bore size		38 mm
I.D. No.		44E2
Idle r/min.		1 150–1 250
Float height		16.0 ± 1.0 mm (0.63 ± 0.04 in)
Main jet	(M.J.)	#175
Main air jet	(M.A.J.)	#200
Jet needle	(J.N.)	R1472L1L-2nd
Cut-away	(C.A.)	#5
Slow jet	(S.J.)	#55
By-pass	(B.P.)	0.8 mm (0.031 in)
Pilot outlet	(P.O.)	0.7 mm (0.028 in)
Air screw	(A.S.)	1 turn out
Throttle cable play		3.0–6.0 mm (0.12–0.24 in) at the throttle grip

BRAKE + WHEEL

Unit: mm (in)

ITEM		STANDARD	LIMIT
Brake lever play		0.1–0.3 (0.004–0.01)	———
Rear brake pedal play		5–15 (0.2–0.6)	———
Rear brake pedal height		0–10 (0–0.4)	———
Brake disc thickness	Front	3.0 ± 0.2 (0.118 ± 0.008)	2.5 (0.10)
	Rear	4.5 ± 0.2 (0.177 ± 0.008)	4.0 (0.16)
Brake disc runout	Front & Rear	———	0.30 (0.01)
Master cylinder bore	Front	12.700–12.743 (0.5000–0.5017)	———
	Rear	12.700–12.743 (0.5000–0.5017)	———
Master cylinder piston diameter	Front	12.657–12.684 (0.4983–0.4994)	———
	Rear	12.657–12.684 (0.4983–0.4994)	———
Brake caliper cylinder bore	Front	27.000–27.050 (1.0630–1.0650)	———
	Rear	27.000–27.050 (1.0630–1.0650)	———
Brake caliper piston diameter	Front	26.900–26.950 (1.0591–1.0610)	———
	Rear	26.900–26.950 (1.0591–1.0610)	———
Wheel rim runout	Axial	———	2.0 (0.08)
	Radial	———	2.0 (0.08)
Wheel axle runout	Front	———	0.25 (0.010)
	Rear	———	0.25 (0.010)
Tire size	Front	3.00–21 51P	———
	Rear	120/90–18 65P	———
Tire tread depth	Front	———	4.0 (0.16)
	Rear	———	4.0 (0.16)

SUSPENSION

Unit: mm (in)

ITEM	STANDARD	LIMIT	NOTE
Front fork stroke	297 (11.6)	———	
Front fork spring free length	———	525.5 (20.7)	
Front fork spring rate	7.65 N/mm (0.78 kgf/mm)	———	
Front fork oil level	109 (4.3)	———	
Front fork air pressure	0 kPa (0 kg/cm^2, 0 psi)	———	
Rear shock absorber gas pressure	1 000 kPa (10 kg/cm^2, 142 psi)	———	
Rear shock absorber spring rate	44.1 N/mm (4.5 kgf/mm)	———	
Rear shock absorber spring pre-set length	263.8 (10.4)	———	
Rear wheel travel	314 (12.3)	———	
Swingarm pivot shaft runout	———	0.3 (0.01)	

TIRE PRESSURE

Front & Rear	150 kPa 1.50 kg/cm^2 22 psi

ELECTRICAL

Unit: mm (in)

ITEM	SPECIFICATION		NOTE
Ignition timing	4.0° B.T.D.C. at 1 500 r/min.		
Spark plug	Type	NGK: BR9EV	
	Gap	0.5–0.6 (0.020–0.024)	
Spark performance	Over 8 (0.3) at 1 atm.		
Ignition coil resistance	Primary	0–1 Ω	Terminal–Ground
	Secondary	15–18 kΩ	Plug cap–Ground
Magneto coil resistance	Pick-up coil	81–121 Ω	Br–W
	Charging coil	0.6–0.7 Ω	Y–Y
Regulated voltage	13.5–14.5V at 5 000 r/min.		

WATTAGE

Unit: W

ITEM		SPECIFICATION
Headlight	HI	60
	LO	55
Brake light/taillight		21/5
Turn signal lights		21
Speedometer light		1.7
Turn signal indicator light		2.0
High beam indicator light		2.0
Neutral indicator light		2.0

FUEL + OIL + COOLANT

ITEM	SPECIFICATION		NOTE
Fuel type	Unleaded gasoline minimum 95 octane (RON)		
Fuel tank capacity	Including reserve	11.5 L (3.0/2.5 US/Imp gal)	
	Reserve only	2.5 L (0.7/0.5 US/Imp gal)	
Engine oil type	B.P. RACING 2T-R SHELL SPORTS SX MOTUL 800 2T CASTROL A747		
Transmission oil type	SAE 10W/40		
Transmission oil capacity	Change	650 ml (0.7/0.6 US/Imp qt)	
	Overhaul	750 ml (0.8/0.7 US/Imp qt)	
Front fork oil type	SUZUKI fork oil SS-05 or an equivalent fork oil		
Front fork oil capacity (each leg)	639 ml (21.6/22.5 US/Imp oz)		
Coolant type	Use an anti-freeze & summer coolant compatible with aluminum radiator, mixed with distilled water only, at the ratio of 50 : 50.		
Coolant capacity	1 170 ml (1.3/1.1 US/Imp qt)		
Rear shock absorber oil type	SUZUKI Rear suspension oil SS-25 or an equivalent rear suspension oil		
Rear shock absorber oil capacity	345 ml (11.7/12.1 US/Imp oz)		
Brake fluid type	DOT 4		

Prepared by

SUZUKI MOTOR CORPORATION

Motorcycle Service Department
2nd Ed. May, 1998
1st Ed. March, 1998
Part No. 99500-22071-01E
Printed in Japan

SUZUKI MOTOR CORPORATION

Printed in Japan TK
W X